CORGI

CE

MONSTER AG TT

Code 4-329712_uk dated 02/10

English

Technical assistance manual 3

I diritti di traduzione, di memorizzazione elettronica, di riproduzione e di adattamento totale o parziale con qualsiasi mezzo (compresi microfilm e copie fotostatiche) sono riservati.
Le informazioni contenute in questo manuale sono soggette a variazioni senza preavviso.

Italiano

All rights reserved. No part of this publication may be translated, stored in an electronic retrieval system, reproduced, or partially or totally adapted by any means (including microfilm and photostats) without prior permission.
The information contained herein may be subject to modifications without prior notice.

English

Les droits de traduction, de mémorisation électronique, de reproduction et d'adaptation complète ou partielle par tout type de moyen (y compris microfilms et copies photostatiques) sont réservés.
Les informations fournies dans ce manuel peuvent être modifiées à tout moment et sans préavis.

Français

Alle Rechte der Übersetzung, der Speicherung, Reproduktion sowie der gesamten oder teilweisen Anpassung durch ein beliebiges Mittel (einschließlich Mikrofilm und Fotokopien) sind vorbehalten.
Die in diesem Handbuch enthaltenen Informationen können ohne Vorbescheid geändert werden.

Deutsch

Quedan reservados los derechos de traducción, de memorización electrónica, de reproducción y de adaptación total o parcial con cualquier medio (incluidos microfilmes y fotocopias).
Las informaciones contenidas en el presente manual pueden sufrir variaciones sin aviso previo.

Español

Elaborazione grafica e impaginazione

Ufficio **P**ubblicazioni **T**ecniche

TRANSLATION OF ORIGINAL INSTRUCTIONS

TABLE OF CONTENTS

MECHANICAL PART 4
1. FIRST CHECKS AFTER INSTALLATION 4
2. TURNTABLE TROLLEY UNIT 5
3. SLIDING BLOCKS UNIT 13
4. TOOL CARRIAGE 17
5. MACHINE ADJUSTMENT 20
6. HYDRAULIC CONTROL UNIT 21

ELECTRONIC/ELECTRIC PART 23
1. INTENDED USE 23
2. HOW THE MANUAL IS STRUCTURED 23
3. AN OVERALL GLANCE AT THE MACHINE 24
4. SERVICE PROGRAMMES 27
5. MACHINE CALIBRATION 29
6. ADVANCE STOPPING CALIBRATION 30
7. GLOBAL BEAD BREAKER DISC TANGENT CORRECTION 32
8. GLOBAL TOOL TANGENT CORRECTION 34
9. PROGRAMMING THE LASER SENSOR 36
10. ELECTRONIC BOARDS - LAYOUT AND MEASURING POINTS 38
12. ADJUSTMENTS 53
13. TROUBLESHOOTING 55

UK

COMIM - Code 4-329712_uk dated 02/10.

MECHANICAL PART

1. FIRST CHECKS AFTER INSTALLATION

Carry out the following checks after connecting to an electrical socket:

Monster and AGTT 1600A/1600 versions:

- Perform a complete stroke for each hydraulic cylinder.
- Check maximum pressure setting which must be 180 bar.
- Check the level of oil in the control unit. With all the cylinders closed there must be 5 cm between the dipstick and the plug without screwing it down.
- Check the levelling off of the base. If the customer primarily uses heavy-duty wheels, level with one wheel locked on the turntable. In the case of very heavy-duty wheels it is advisable to turn the foot one more time. The chassis is designed to absorb jolts due to the heavy weight.
- Checking the 3 turntable rotation speeds. Low speed has only one rotation direction.
- Speed performance might not be good when the machine is cold. Heat the oil for a few minutes by moving the cylinders. Even the QS2 switch can be used to heat the oil, it keeps the control unit ON and the oil moving. But the second translation speed will not work in this way!
- Check that if there is a radio connection it is subject to no interference and does not create interference with any nearby equipment.

MONSTER version:

- Check tool tangent and bead breaker disc position at 22.5" and at 42".
  - At 22.5" there must be 27 mm between the tool pad and bead seat on the rim. The same applies to the bead breaker disc
  - At 42" there must be 45 mm between the tool pad and bead seat on the rim. The same applies to the bead breaker disc

  If necessary correct the positions by means of the calibrations explained in the electric/electronic part of the service manual.
- With one wheel mounted, enter the rim diameter on the display and carry out a Side To Side procedure. Check that the chain sensor blinks during the Side To Side.
- Checking the tool's working position. A distance of 160 mm between the centre of the ball joint and closing of the cylinder. See the relative paragraph for more information.

AGTT 1600A / 1600 versions:

- Checking tool arm rotation.
- Checking the manual search mechanism.

Recommendations:

- When working with wheels that are heavier than 300 Kg, use only the first rotation speed of the turntable spindle. This will safeguard the gear unit and ensure a longer life.
- Advise the customer to keep the sliding block guides well greased to protect them and ensure a longer life.

2. TURNTABLE TROLLEY UNIT

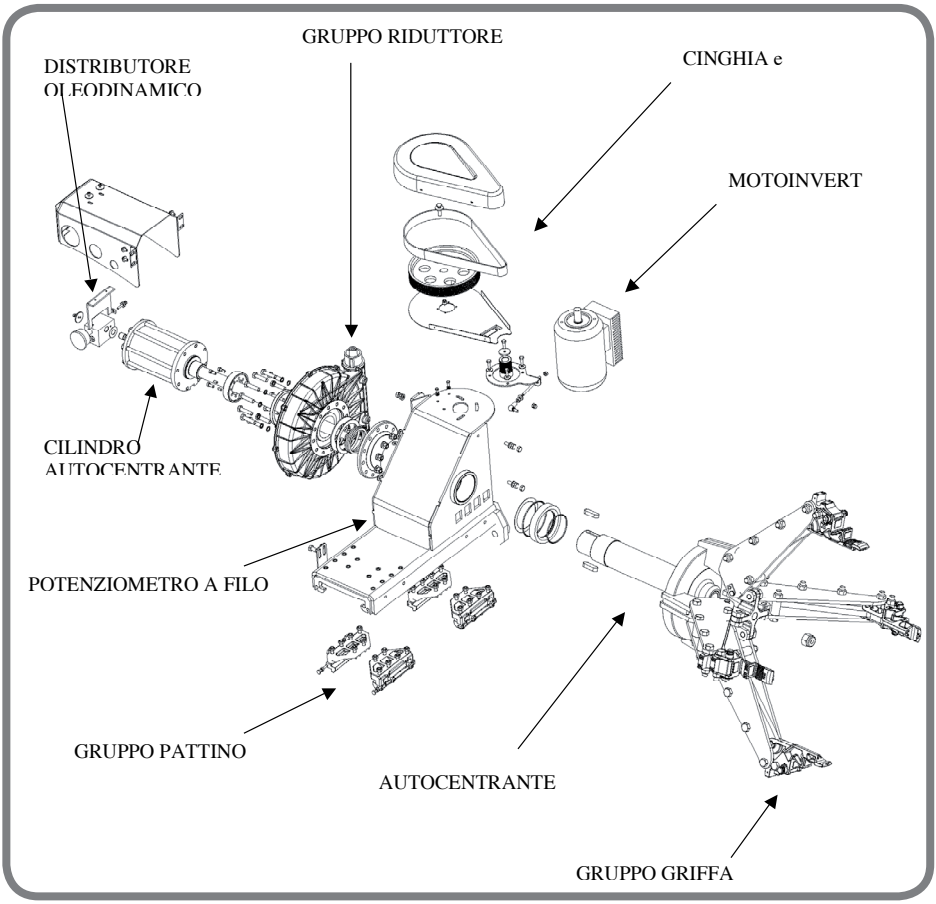

UK

2.1. Replacing and tensioning the motor inverter belt

- Remove the casing
- Loosen the 4 screws securing the motor
- Loosen the nuts on the tie-rod
- By means of the motor, remove tension to the belt
- Replace the belt
- Tighten the belt by way of the nut on the tie-rod
- Tension value: 180 Hz
- Tighten the outside nut on the tie-rod and the 4 screws of the motor
- Refit the casing

2.2. Replacing the pulleys

- Remove the casing
- Loosen the 4 screws securing the motor
- Loosen the nuts on the tie-rod
- Remove the belt
- Loosen the screw locking the pulley
- Replace the pulley
- Tighten the screw, using some medium strength Loctite thread-locking agent 243
- Refit the belt, following the instructions given in the relative paragraph
- Check the tightness of the screw on the pulley you have just replaced.

2.3. Replacing the motor-inverter

- Remove the casing
- Loosen the 4 screws securing the motor
- Loosen the nuts on the tie-rod
- Remove the belt
- Disconnect the cables of the motor-inverter in the junction box
- Completely undo the 4 screws supporting the motor
- Replace the motor-inverter
- For assembly, repeat the same steps for disassembly but in the reverse order
- Use medium strength Loctite 243 on the 4 screws locking the motor
- Refit the belt, following the instructions given in the relative paragraph
- Check tightness of the screw on the driving pulley.

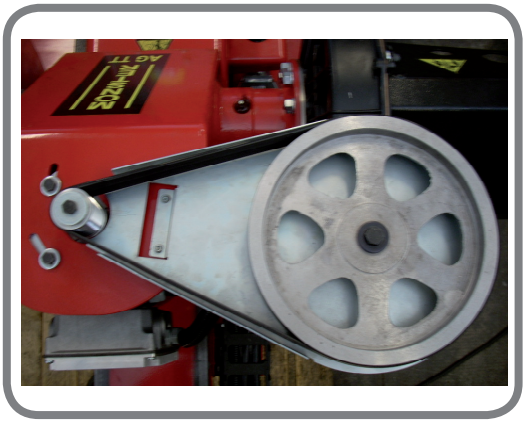

2.4. Replacing the mobile clamp

- Remove the screw securing the locking spring
- Take the pin out
- Unscrew the M 18x1.5 nut
- Replace the mobile clamp
- Insert 2 new plugs, supplied with the machine, or on request
- Refit the M18x1.5 bolt, tightening the nut so the clamp is gripped in rotation and the pin fits into the two seats
- Refit the spring
- Insert the pin.

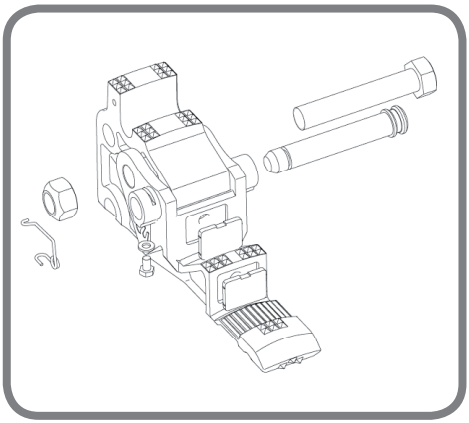

2.5. Replacing the fixed clamp

- Open the turntable almost completely, without reaching the end of travel
- Take the mobile clamp off by removing the M18x1.5 bolt
- Unscrew the other M 18x1.5 nut
- Unscrew the dowel locking the pin between the connecting rod and the fixed clamp
- Remove the pin and the M18x1.5 screw
- Replace the fixed clamp
- For assembly, repeat the same steps for disassembly but in the reverse order
- Use medium strength Loctite 243 on the dowel locking the pin on the connecting rod
- Check tightness of the M18x1.5 nuts, movements must be gripped.

2.6. Replacing the hydraulic distributor

- Close the turntable
- Remove the protective casing
- Disconnect the hydraulic pipes
- Remove the 2 screws and the stop washer
- Pull the distributor out
- It is compulsory to use the cone for assembly as it prevents damaging the gaskets
- Refit the new distributor
- Repeat the same steps for disassembly but in the reverse order
- Use medium strength Loctite 243 on the 2 screws locking the distributor
- Adjust clearance if necessary with the adjustment screw.

2.7. Replacing the turntable cylinder

- Open the turntable completely at maximum pressure
- Unscrew the M27 nut on top of the rod
- Close the turntable cylinder completely
- Remove the casing and the distributor as explained above
- Unscrew the whole cylinder
- Screw the new cylinder down. Use medium strength Loctite 243. Tightening torque with wrench 500 Nm
- For assembly, repeat the same steps for disassembly but in the reverse order.

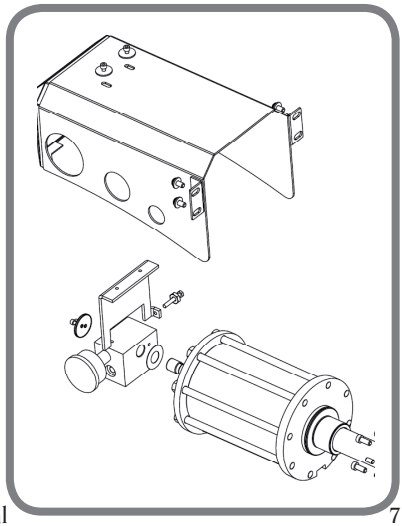

UK

2.8. Gear unit-turntable unit

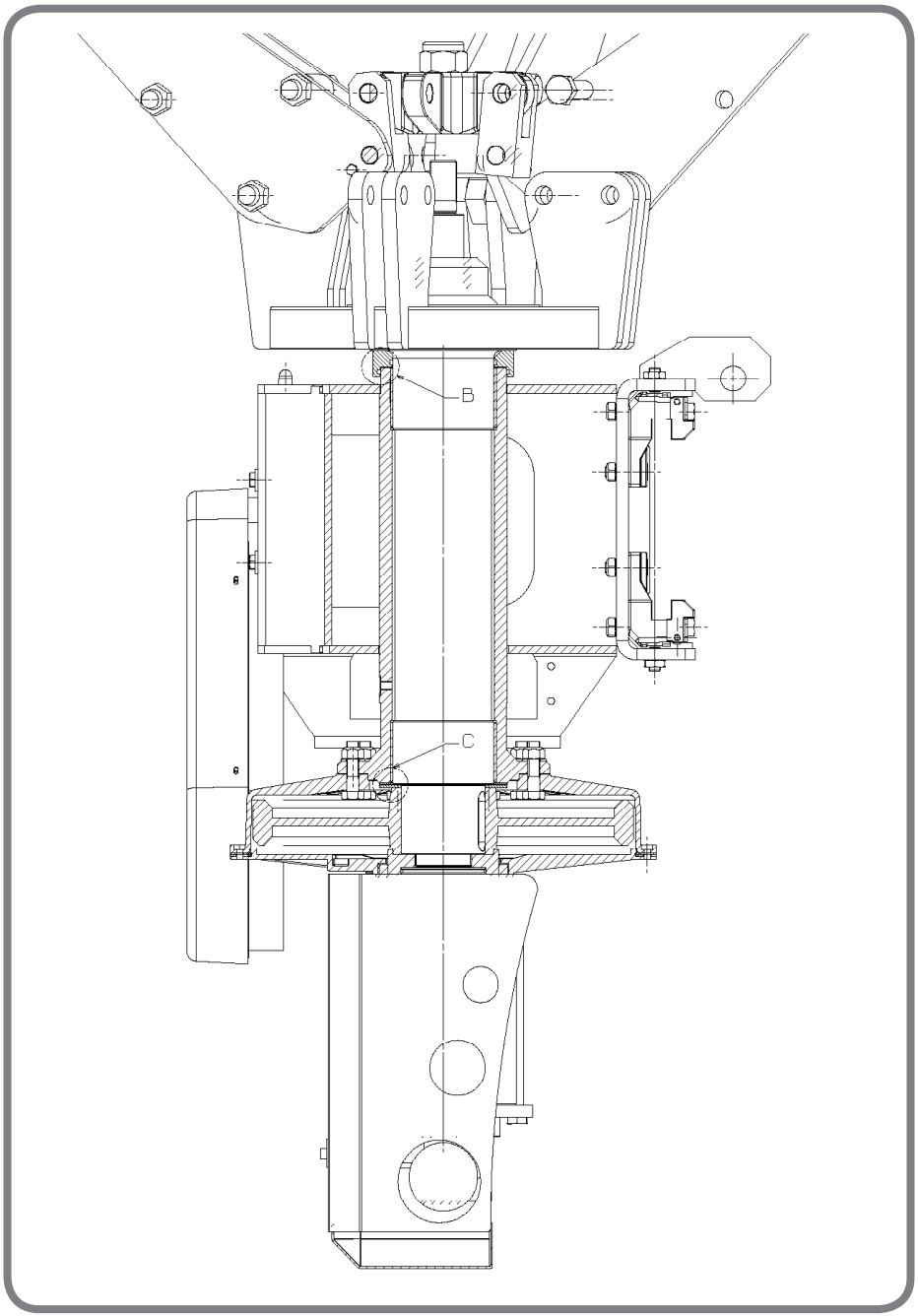

2.9. Replacing the gear unit crown

Before opening the gear unit box, remove the pulley casing and the driven pulley followed by the distributor and turntable cylinder, as explained in the relative sections.

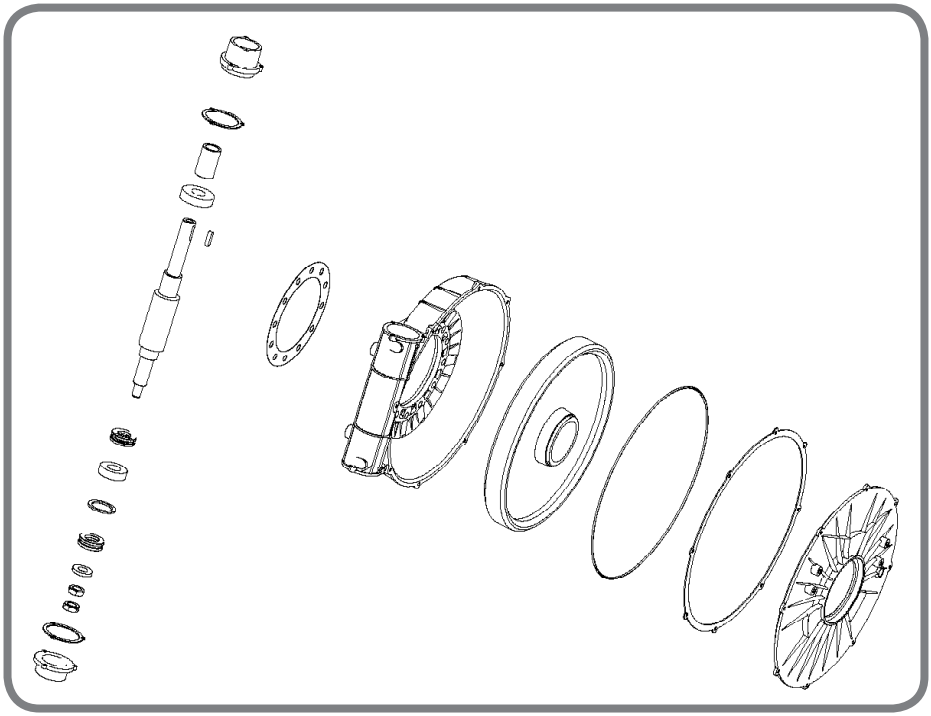

UK

- Remove the big cover and the two small ones from the box
- Remove the locking ring between the crown and spindle hub
- Unscrew the two nuts under the axial bearings
- Remove the worm screw
- Remove the crown
- Clean the box of grease and replace it with new grease.

2.9.1. Use shims when assembling the crown-worm screw

The axis of the crown must be positioned in the halfway point of the worm screw

A 3 mm steel ring and a 2 mm bronze ring are positioned between the crown and the fixed part of the spindle seat. For correct assembly there should be a gap of 0.1 mm between the two rings. 0.2 mm thick steel shims are used to ensure the position is correct.

The 100 diameter spindle hub projects 1.7 mm from its seat. 2 x 0.2 mm thick steel rings are to be fitted on the 83 diameter, where the crown is mounted. Summing up the two rings and the projection we have 2.1 mm. The bronze ring is to be housed in the projecting part of the spindle, being 2 mm, leaving 0.1 mm with respect to the two steel rings.
If the spindle projects less than 1.7 it will be necessary to add one or two 0.2 mm steel rings to reach

2.1 mm with a tolerance of 0/ + 0.1 mm. On the contrary, if it projects more than 1.7 then remove 1 or both the 0.2 mm rings.

The measurement to be guaranteed is 2.1 mm with a tolerance of 0/ + 0.1 mm.

When this measurement is guaranteed, the 3 mm steel ring is to be inserted on the 83 diameter. By resting against the 0.2 mm rings there will be an 0.1 mm clearance with respect to the bronze ring. Then add another two 0.2 mm rings.
Insert the two tabs in the housings on the spindle hub and fit the crown.
Once mounted, check with a ruler that the crown hub is on the same level as the edge of the gear unit box.
If the hub projects with respect to the edge of the box, remove one or both the 0.2 mm rings inserted between the crown and the 3 mm steel ring. Vice versa, if the crown is below the level of the box edge, add the necessary number of 0.2 mm rings to bring it up to the same level.

Assembly diagram, detail C:

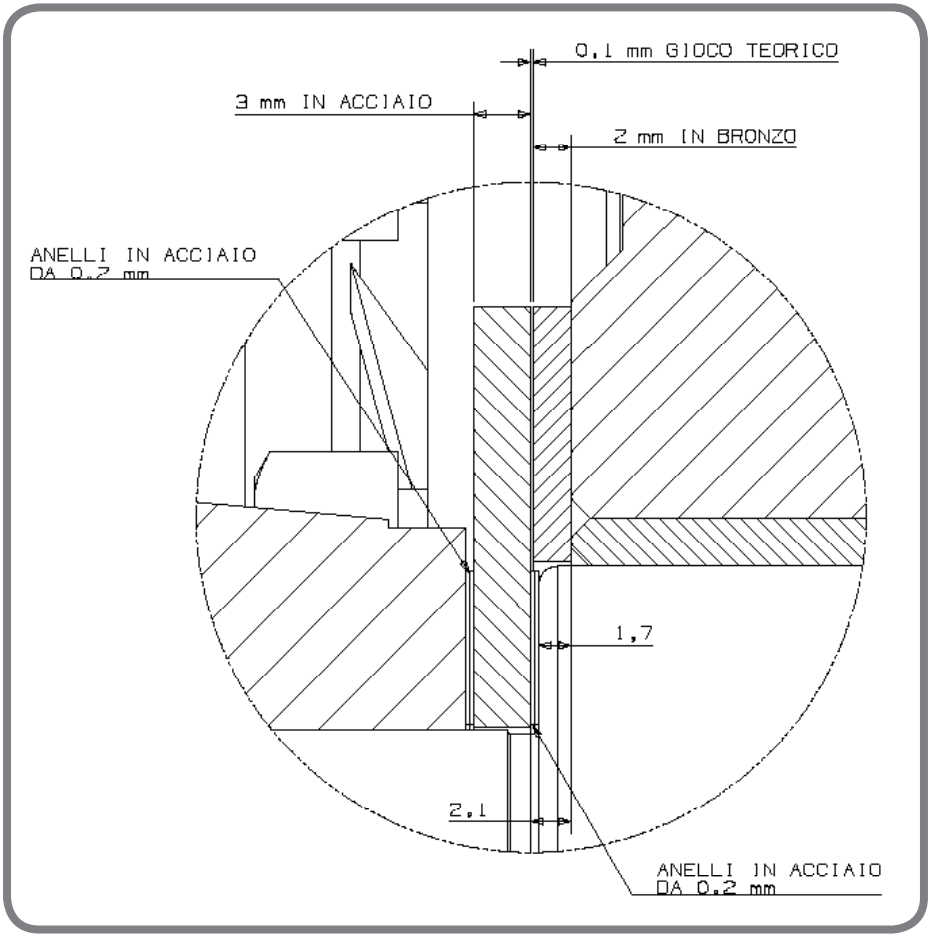

Once the crown is mounted correctly
- Insert the worm screw
- Fit the end position ring. Tighten the 4 cylindrical head screws to 35 Nm. Spread some medium strength Loctite 243 on the 4 dowels
- Mount the bearing pack as per the enclosed diagram.

The axial bearings must have the part with the smallest hole towards the outside of the bearing pack

- Tighten the nut on the first thrust bearing to 22 Nm then, holding the latter still, tighten the second nut. Use full strength Loctite. Once mounted, check that the worm screw is not too gripped and is able to operate the gear unit.
- Replace the gaskets on the three covers
- Fit the three covers
- Tighten the 7 screws on the gear unit cover to 12 Nm. Tighten the eighth screw directly onto the aluminium taking care not to ruin the thread
- Refit the turntable cylinder, distributor and pulley as explained in the relative chapters.

2.9.2. Assembly diagram of bearings on the gear unit

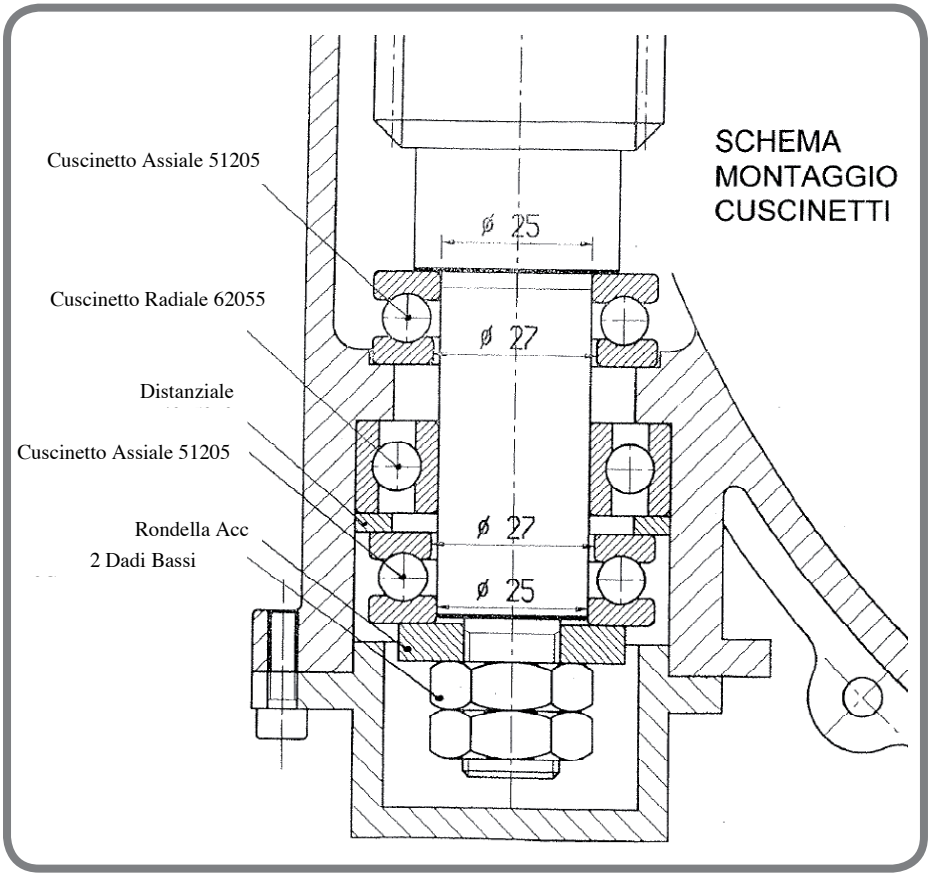

UK

2.10. Replacing the gear unit box

Proceed as described for replacing the gear unit crown
In addition:
- Replace the gasket between the box and hub
- Tighten the 12 screws between the gear unit box and spindle holder hub to 85 Nm.
- Screw the remaining two anchorage points without stretching the box.

2.11. Replacing the turntable spindle

To remove the spindle it is necessary to remove the pulley casing and the driven pulley, the distributor, the turntable cylinder and the gear unit crown as explained in the relative sections.

- Extract the spindle from its seat
- Check wear of the DU bushings and replace them if necessary
- Check the gaskets on the spacer ring between the spindle and its seat and replace them if necessary
- Make certain that a 1 mm steel ring is inserted inside the spacer ring
- Insert the spacer ring in the spindle hub up to the end position
- Mount the new spindle
- Move the spindle to the end position, using one or two clamps if needed
- Carry out all the steps explained for mounting the crown, paying attention to the correct use of the shims.

Detail B:

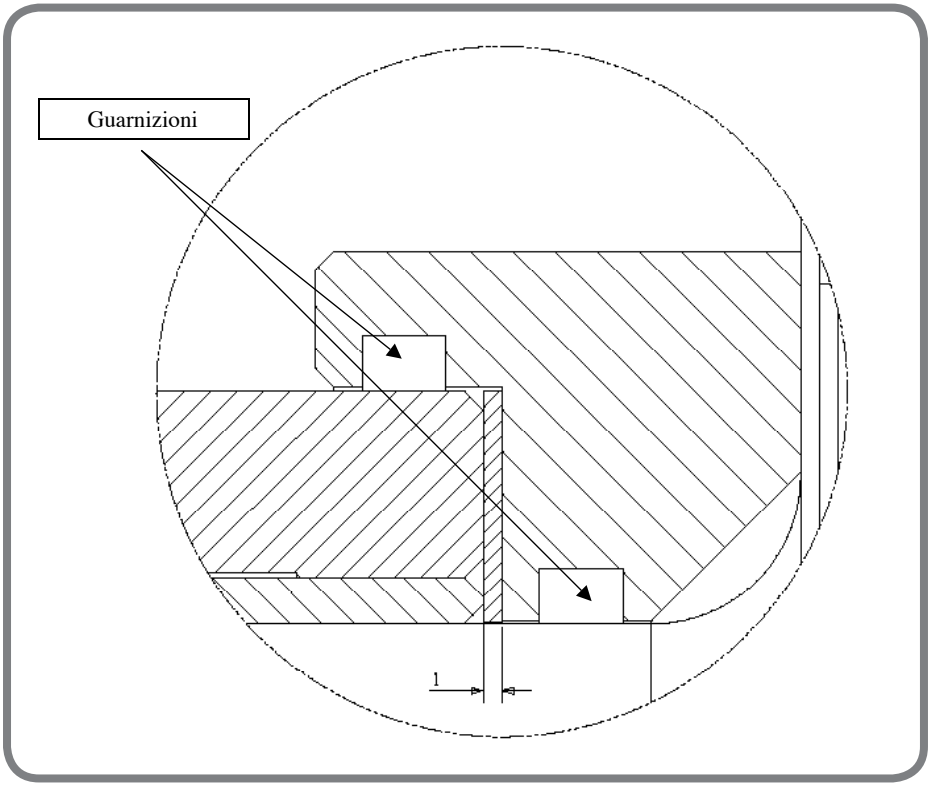

2.12. Replacing the wire potentiometer

- Open the junction box, disconnect the potentiometer cable from the board and unscrew the cable gland checknut.
- Disconnect the sensor wire
- Undo the screws supporting the potentiometer
- Replace the potentiometer
- Repeat the above steps described for assembly but in the reverse order
- Calibrate as described in the electric/electronic part of the Service Manual.

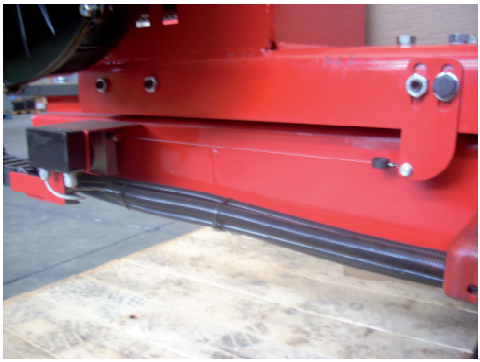

3. SLIDING BLOCKS UNIT

This new sliding block has the characteristic of being able to recover the clearance that is acquired with the passing of time.
The upper part (dark grey in the picture) is fixed to the carriage on which it is assembled whereas the lower part (light grey) is able to slide thanks to the slanting tops, by turning the adjusting screw. It is this sliding that allows clearance to be recovered, created during operation.

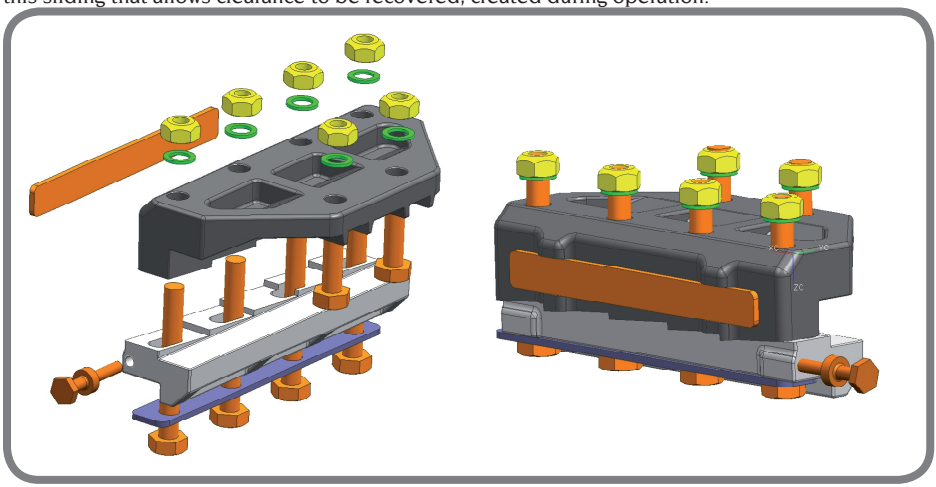

It is of paramount importance to know the mechanism and the adjustment methods for a perfect tyre changer operation.

On these sliding blocks it is possible to adjust the width and height of the plate on which they slide.

UK

3.1. Adjusting the width

This is the same adjustment made to all the tyre changers in production.

- By means of the two M12 dowels, move the fixed part up against the sliding plate and then go back a quarter of a turn. Tighten the checknut.

- Tighten to 70 Nm the two M10x35 screws to lock the fixed part of the sliding block.

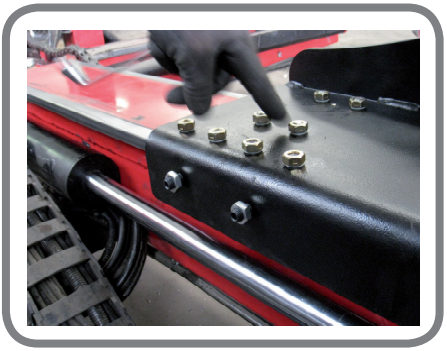

- If you are going to replace the whole sliding unit, do not forget to centre the carriage with respect to the sliding plate using a 2.5 mm shim. The shim goes between the carriage and the fixed part of the sliding block. See also the chapter on replacing a new sliding block.

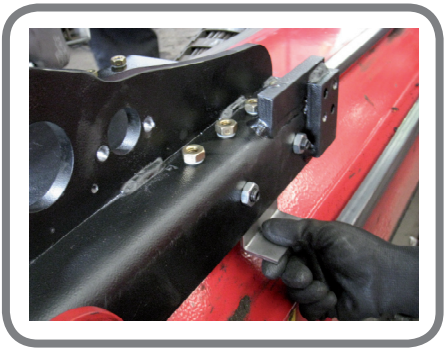

3.2. Adjusting the height

This is the new adjustment added with these sliding blocks

- Loosen the four M10x80 screws to release the mobile part and make it adjustable. Ensure that the mobile part is actually free to move.

- Turn the adjustment screw to recover clearance. Turn the wrench to tighten the sliding block. The following pictures help understand how to tighten the mobile part.

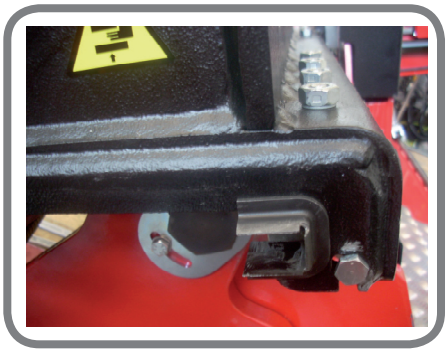

The > < arrows by the adjustment screws show the direction in which to turn the screws to recover clearance!

Be very careful at this stage - if the mobile part is not free to move you risk ruining the adjustment screw. If you feel resistance do not force the screw - you could ruin the thread.

TOOL CARRIAGE:

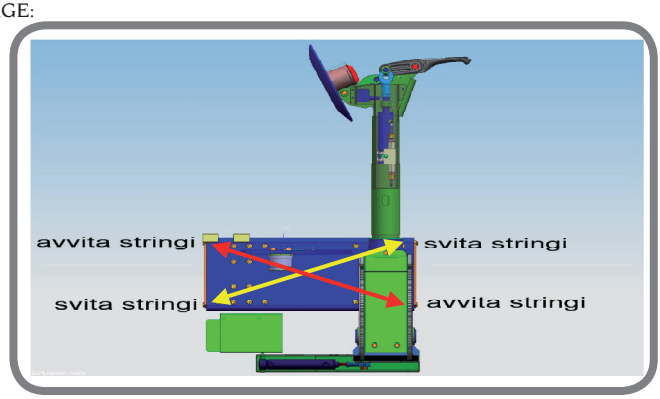

UK

SPINDLE CARRIAGE:

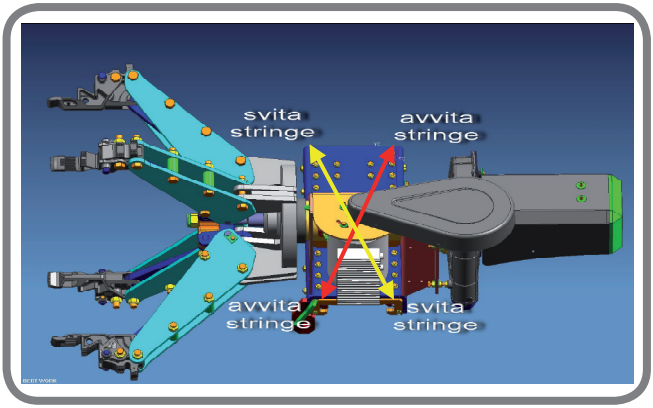

TURNTABLE BAR:

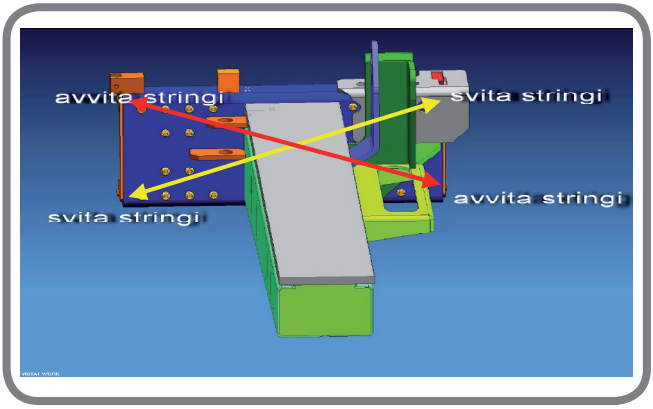

- Once adjusted, tighten the four M10x80 screws to 70 Nm.
- If there is still clearance you will have to work on the adjustment screw again. Repeat the steps described above, tightening half a turn at a time.

3.3 Replacing a sliding block unit

Here are some tips if the whole sliding block unit has to be replaced.

- Loosen all the sliding block screws and ease the carriage out.
- Remove the old sliding block.
- Pre-assemble the six screws on the carriage. Use new washers and nuts.
- With the sliding block in position, turn the adjustment screw and open the mobile part.
- Turn the adjustment screw two complete turns in the opposite direction. The mobile part will close slightly. Look at the enclosed pictures to understand the direction in which the screw tightens.
- Fit the carriage on the sliding plate.
- Position the carriage in the middle of the sliding plate with the aid of a 2.5 mm shim, placed between the carriage and the fixed part of the slide. This has to be done on both sides of the carriage.
- Adjust the width.
- Adjust the height.

One way to see if the sliding blocks are adjusted correctly is to see at what minimum pressure the carriages move. By lowering the control unit pressure movements should be between 30 and 40 bar.

4. TOOL CARRIAGE

4.1. Adjusting tool position

The new Leva la Leva (Without Lever) device is the combined action between tool rotation and moving back of the turntable unit. If the tool is not in position A (as shown in the figure) the micro-switch will not switch and the Leva la Leva (Without Lever) command will not work. See also the error message on the display in the relative chapter of the electric/electronic service manual. It is the micro-switch that determines the horizontal working position.

Position A is 160 mm. Tolerance allowed: ± 2 mm.

Adjusting position A between the middle of the ball joint and the cylinder closing flange:

- Remove the protective casing.
- Bring the joint to a distance of 160 mm by manually operating cylinder stroke.
- Position the cam symmetrically in relation to the micro-switch wheel. Tighten the locking dowel
- Fix the micro-switch perpendicular to the cam.
- Check that distance A is observed both in opening and closing of the cylinder.
- If it is not observed in both directions, either move the cam slightly or change the position of the micro-switch.
- Refit the casing.

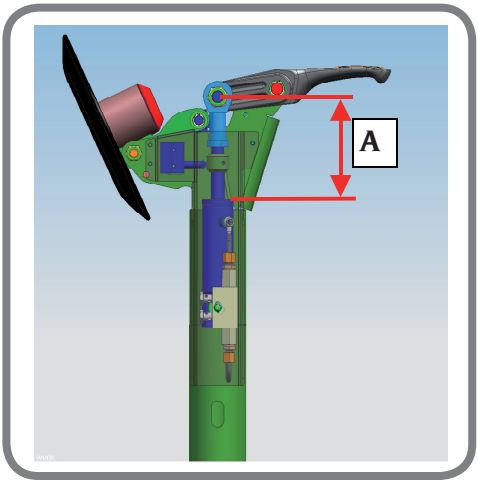

UK

4.2. Replacing the arm or tool arm support

When replacing the arm or tool support, integrity of the unit mounted must be guaranteed together with the correct clearances. Shims are also included with the arm and support parts to help correct assembly.

4.2.1. Using the shims on the tool arm-support unit

There is a 1 mm thick steel washer between the tool arm and support.
See detail B.

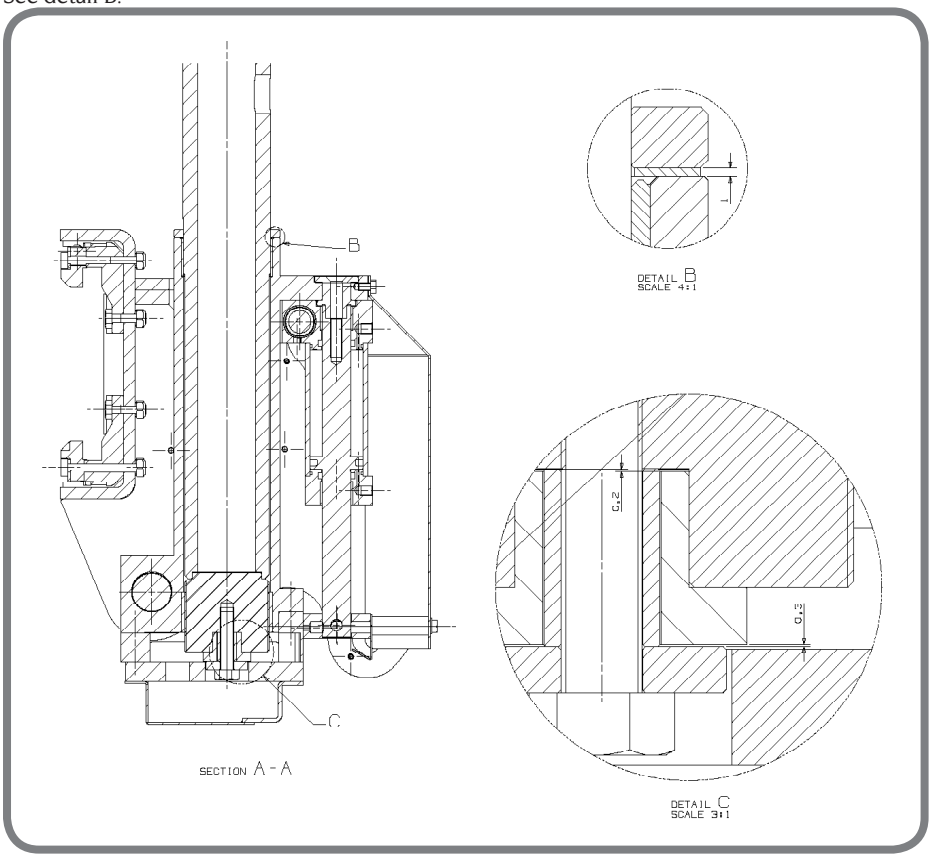

For correct assembly the check plate must have the right clearance with the tool arm support and with the washer that keeps it in position. See detail C.
The check plate fits into a milled part on the bottom of the tool arm where it must be free to slide. To slide freely there must be an 0.2 mm clearance between the check plate and end position of the tool arm support. Tolerance 0 / +0.2 mm
This plate has a slot inside which a cylindrical spacer is to be inserted. A washer is to be placed on this spacer which will keep the plate in place. There must be a clearance of 0.3 mm between the washer and plate. Tolerance 0 / +0.2 mm
To guarantee a correct assembly it might be necessary to have to increase or reduce the shim between the tool arm and support, as explained above in detail B.

If the tool arm support ever needs replacing, pay attention to eliminating clearances with the tool carriage; 40 diam. shims are foreseen for the pin that acts as the pivot. Maximum clearance 0.2 mm

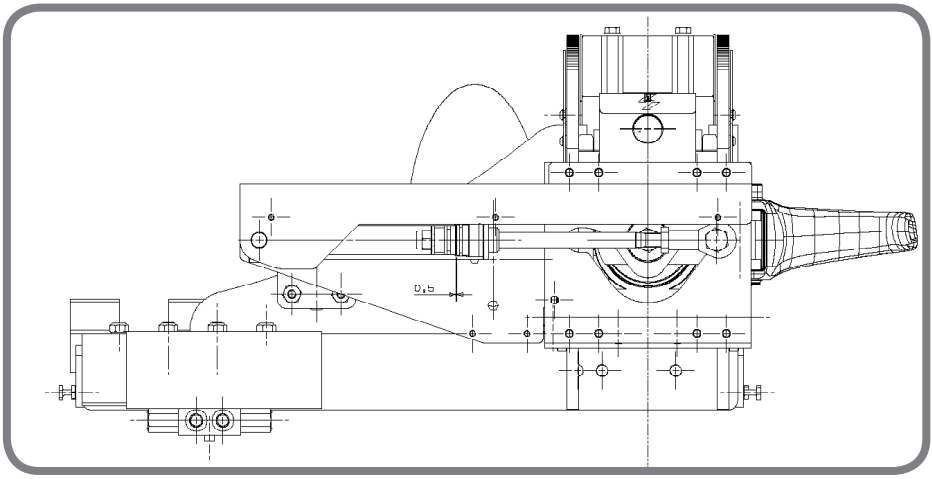

If the tool arm rotation cylinder, ball joint or check plate has to be replaced you will have to adjust the ball joint so the cylinder does not reach the end of its stroke - there should be 0.5 to 1 mm left to the end.
To make this adjustment, move the rotation cylinder to the end of its stroke, tighten or loosen the ball joint until it is off centre in relation to the check plate pin by 0.5 - 1 mm. This offset must be towards the outside of the plate rotation path, both in closing and opening of the cylinder.

4.3. Replacing the tool rotation micro-switch

If the micro has to be replaced it must be removed when servicing the tool carriage. Pay attention to how it works as correct operation of the automatisms connected to Side to Side depends on it.
The micro-switch for controlling tool rotation must be squeezed when the hook is facing the turntable and the cylinder is closed.

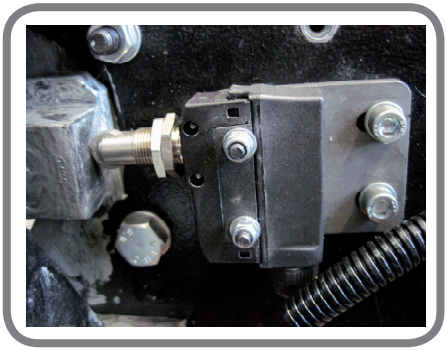

UK

5. MACHINE ADJUSTMENT

5.1. Adjusting the lifting cylinder with wheel support

The secondary lifting cylinder has a wheel support so it can move during translation.
The tip of the stem is milled for a size 38 spanner for adjusting the wheel support position. Loosen the checknut, keep the support still and turn the stem; depending on the turning direction, the support will move away or come closer to the round bar.
With the cylinder at the end of its stroke, both open and closed, the wheel support must have a maximum clearance of 1 mm in relation to the round seat in which it slides.

5.2. Adjusting the base feet

The base is fitted with two adjustable feet. They are used to level the machine with respect to the ground on which it is installed.
The centre part of the base is 10 mm off the ground which imparts elasticity to the structure so it can absorb rebounds.
- Loosen the checknut.
- Turn the foot to lift or lower the base.
- Tighten the checknut

As a rule with very heavy wheels it is necessary to unscrew the left foot even by several centimetres.

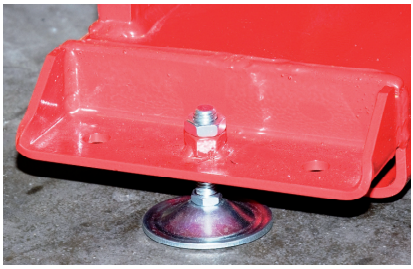

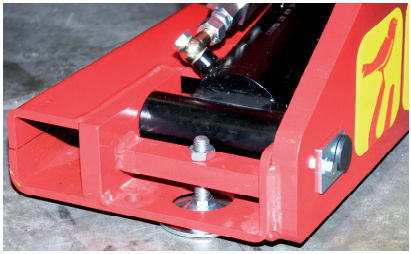

In the case of very heavy wheels it might be necessary to adjust the feet. This eliminates any jolting of the rear of the base.
In the case of very heavy wheels it is advisable to turn the foot one more time. The chassis is designed to absorb jolts due to the heavy weight.

6. HYDRAULIC CONTROL UNIT

6.1. Replacing the solenoid valve

If one or more solenoid valves need replacing, the tightening torque of the nuts on the solenoid valve pack tie-rods is of great importance. If tightening torque is too much there could be friction on valve slides resulting in poor holding of switching. The cylinders might not stay in position, oil could drain into the tank.

- Loosen the nuts on the tie-rods
- Replace the faulty solenoid valves
- Pay attention to the right position of the O rings when replacing
- Tighten the nuts on the tie-rods to a torque of 22-25 Nm.

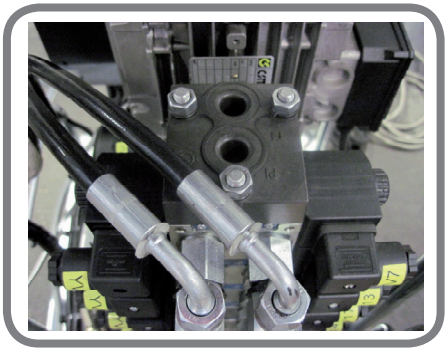

6.2. Replacing the hydraulic pump

Proceed as described

- Undo the 2 screws connecting the solenoid valve block to the manifold.
- Take care not to bend the hydraulic pipes when putting the solenoid valve block back.
- Remove the electric motor.
- Remove the manifold.
- Replace the pump.
- Clean the filter, removing all residue.
- Refit the manifold and position the joint.
- Put the electric motor back in place.
- Reposition the solenoid valve block, taking care not to damage the 2 O rings.

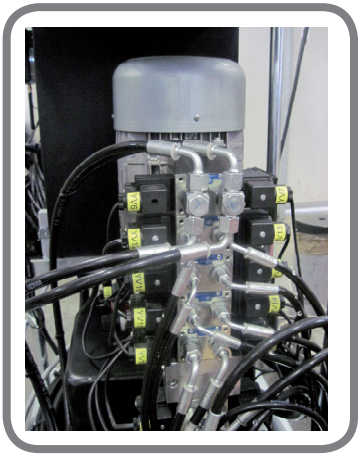

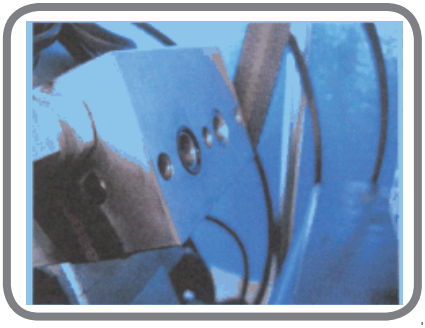

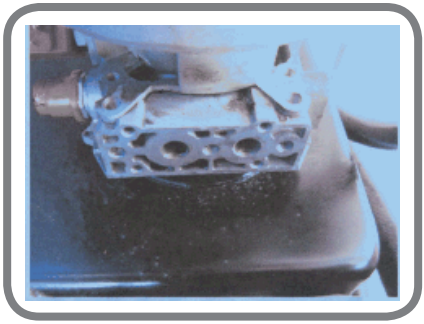

UK

Notes

ELECTRONIC/ELECTRIC PART

1. INTENDED USE

This technical manual is intended for people who install, provide assistance and service the automatic heavy-duty tyre changers.
Consequently this manual **is not intended for the end customer.**

Some information in this manual is to be considered confidential and, therefore, not to be disclosed in any shape or form to third persons.

The manual must be read in its entirety with maximum attention; some of the operations described **are potentially dangerous** (e.g. the service programmes) and are to be done only by adequately trained personnel.

This manual is to be used together with the Operating and Maintenance manual (it does not replace it!) that gives other information, tables and diagrams essential to understand how the machine works and, therefore, perform technical assistance jobs in conditions of maximum safety for one's self and for others.

2. HOW THE MANUAL IS STRUCTURED

This manual is structured in the following way:

CHAP. 3 - This chapter describes the overall structure of the machine, its component parts and the available functions.

CHAP. 4 - This chapter gives a detailed explanation of how to access and use the service programmes. The service programmes are auxiliary programmes intended only for technical assistance personnel and studied to facilitate installation, maintenance and troubleshooting.

CHAP. 5 - The machine's calibration procedure is described in this chapter.

CHAP. 6 - The advance stopping calibration procedure is described in this chapter.

CHAP. 7 - The procedure for setting global bead breaker disc tangent correction is described here.

CHAP. 8 - The procedure for setting tool tangent correction is described here.

CHAP. 9 - This chapter explains how to programme the laser sensor.

CHAP. 10 - The purpose of this chapter is to illustrate, in detail, the electronic boards on the machine, describing the function of the main components, the meaning of the warning lights, connections and so on.

CHAP. 11 – All the information about the machine's electrical system is given in this chapter including the protection devices (fuses and circuit breakers). The wiring diagrams and physical layout of the system are enclosed.

CHAP. 12 – All the adjustments to be made on the electromechanical and electronic parts of the machine are described in this chapter (e.g. proximity sensors and micro-switches).

CHAP. 13 – This chapter is dedicated to troubleshooting.

CHAP. 14 – The glossary gives all the abbreviations and acronyms used in this technical manual.

CHAP. 15 – This chapter gives a table summarising the calibration and setting operations for global tangent corrections.

UK

3. AN OVERALL GLANCE AT THE MACHINE

The machine, object of this manual, is intended for demounting tyres for heavy-duty use (wheels for vehicles in the transport, earth moving, agriculture, forestry sectors, etc.).

The machine allows a traditional type of use where the operator controls the actuators at his complete discretion (manual mode) or an innovative use where the onboard electronics executes some functions automatically (automatic modes).

The machine has some sensors for executing the functions automatically: a potentiometer for tangent operations, a laser and proximity switch for the Side To Side operations as well as some micro-switches used in several functions.

If these sensors are missing or malfunctioning, the automatic functions can be completely inhibited or performed incompletely.
Whatever the case, the manual controls are always available.

Table 3-1 summarises the automatic and manual functions that are available together with their main features.

Table 3 1 Automatic and manual functions with their features

Function	Type of function Type of command	Remarks
Manual commands	Manual, hands-on	Always available even if there are ongoing alarms relative to the automatic functions.
Bead Breaker Disc Tangent	Automatic, hands-on	Uses the potentiometer to work
Immediate Bead Breaker Disc Tangent	Automatic, NOT hands-on	Uses the potentiometer to work. It is started automatically straight after a diameter has been selected with the +/- keys on the control panel. This function can be cancelled but not aborted.
Tool Tangent	Automatic, hands-on	Uses the potentiometer and the SQ3 micro-switch to work.
Side To Side	Automatic, NOT hands-on	Uses the laser, SQ4 micro-switch for working and the proximity switch. This function can be cancelled but not aborted.
Leva la Leva (Without Lever)	Automatic, hands-on	Uses the potentiometer and the SQ3 micro-switch to work. This function can be cancelled and/or aborted.

Function	Type of function Type of command	Remarks
Return from Leva la Leva (Without Lever)	Automatic, hands-on	Uses the potentiometer and the SQ3 micro-switch to work. This function can be cancelled and/or aborted.
Double hydraulic unit speed	Manual, hands-on	With push button SB2. Limited to right or left translation movement of the tool holder arm (and with temporary reverse movement of the turntable clamp carriage).
Selecting the rotation speed of the turntable clamp	Manual, NOT hands-on	Using the lever selector SA16. Three speeds in the clockwise direction (of which one for grooving, two speeds in the anticlockwise direction).

3.1 Function types

The available functions can be performed with either manual or automatic controls.

Manual controls are those the machine performs upon the direct command of the operator, without the use of any automatism. These controls remain active even if there are alarm conditions that preclude the use of the automatic commands.
Manual controls are always the hands-on type.

Automatic controls are commands that are partly or completely based on the machine's automatisms.
If there is a failure with the machine's sensors, the automatic controls are disabled and the error codes are displayed.
Automatic controls can be the hands-on type or NOT hands-on type.

3.2 Control types

Based on the operating device used (joystick, push buttons, levers, pedals,etc.) the controls can be of the following types:

- Hands-on: the worker is required to operate the control device continuously all the time that particular action is called for on the machine;

The automatic hands-on controls can be aborted at any time, even intervalled by manual controls or they can be cancelled before they have finished.

- NOT hands-on: the worker is NOT required to operate the control device continuously, it will suffice to operate it for a moment to start an automatic procedure. In some cases the automatic procedure starts when the push button is released.

The NON hands-on automatic controls can be cancelled at any time but not aborted.

Figure 3-1 shows the control console: (a) shows the automatic hands-on control, (b) the automatic NON hands-on controls and (c) the manual controls.

UK

Figure 3-1 Layout of the controls on the console.

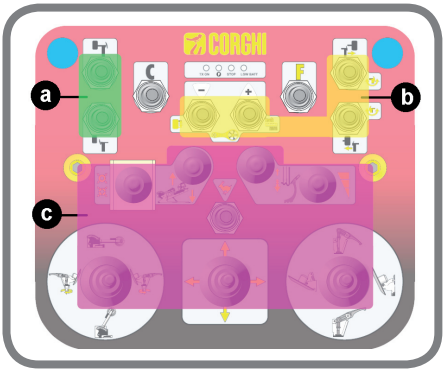

The commands are given by a control console that is physically separate from the machine (it is on a trolley) to give the worker more mobility.

The commands are recognised by the CPU-TX board on the control console, serialised and then sent to the machine via radio or cable.

The serial data are received by the CPU-RX2 board that then decodes them and actuates them, driving the solenoid valves and the two motors.
See figures 3-2 and 3-3 to see the machine's different electrical and electronic parts.

Transmission is normally by radio but if the batteries are flat or the radio modem fails, it is possible to use the emergency serial cable which is provided with the machine; it sees to feeding the control console and to guaranteeing transmission of the commands.

When the emergency serial cable is connected the CABLE LED turns on (HL4 - green) on the side of the electrical board and communication via cable is set automatically.

If an emergency cable is connected when the transmitter is in stand-by (i.e. if no more than 30 seconds have elapsed since the end of the last command) the green LED will not turn on. However, it is enough to give any command on the console to awaken the transmitter and automatically set the communication channel via cable and turn the green LED on.

Figure 3-2
Layout diagram of the machine's control console and electrical board

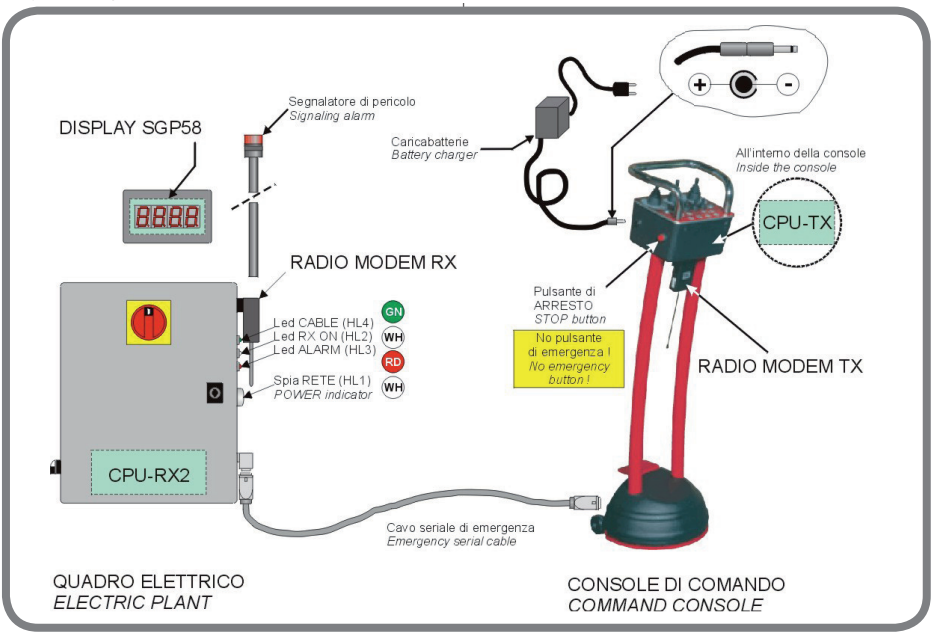

Figure 3-3 Position of the sensors on the machine

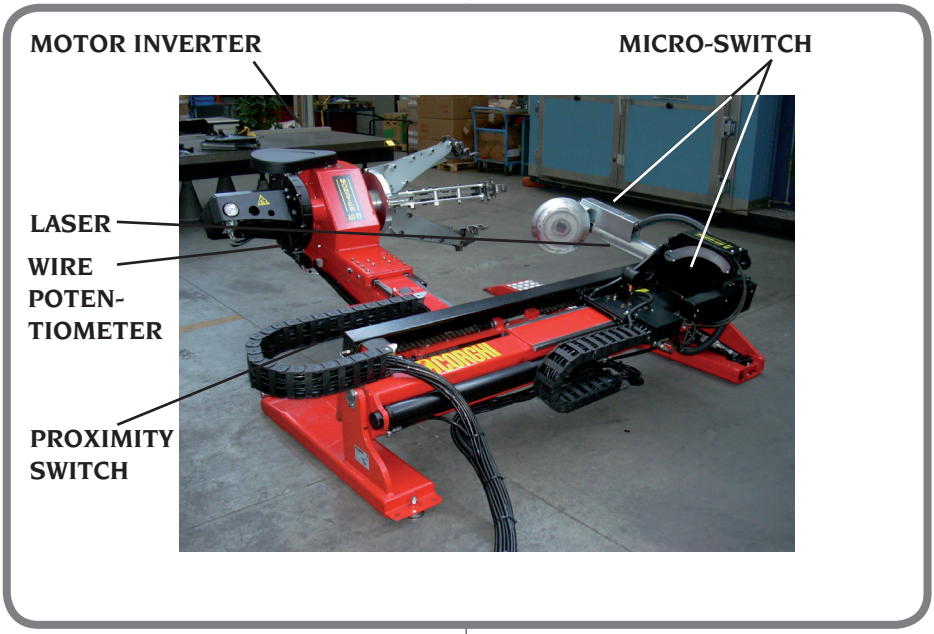

4. SERVICE PROGRAMMES

The software provided with the electronic control board includes, besides the normal work programme, some service programmes intended for technical assistance personnel.

The service programmes may only be used by technical assistance personnel on the following occasions:

- When installing the machine on the end customer's premises, to either calibrate or adjust machine parameters.
- During technical assistance operations and/or routine maintenance.

The service programmes are used with great caution to avoid setting wrong parameters which could cause the machine to malfunction.

These programmes can be accessed via the set of SW1 dip switches on the electronic control board. These dip switches are normally all in the OFF position as can be seen in figure 4-1.

To identify a certain dip switch the designation SW1:X will be used where SW1 is the name of the whole set and X the subject dip switch. For example, when it is written in the text to set dip switch SW1:2 ON it means that only dip switch 2 must be switched ON and therefore does not mean that dip switches 1 and 2 must both be switched ON.

Figure 4-1 DIP switches on the electronic control board

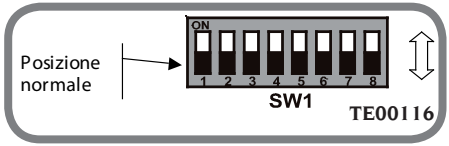

A specific programme is associated with each one of these dip switches as indicated in table 4-1:

UK

Table 4-1 Service programmes available

DIP SWITCH	Reference Programme #	Service programme function	Chapter
1	#1	Machine calibration	5
2	#2	Setting the global correction factor of the bead breaker disc tangent	7
3	#3	Setting the global correction factor of the tool tangent (from software release **CG R0.18**).	8
4	#4	Advance stopping calibration. (from software release **CG R1.0**)	6
5	#5	Not used	---
6	#6	Not used	---
7	#7	Not used	---
8	#8	Forced switching-on of the laser / Laser functioning test	4.1

Some service programmes require the use of the P1 push button to confirm the values displayed or to continue with the procedure. The P1 push button is on the CPU-RX2 board by the side of the SW1 dip switch.
Other service programmes instead require the use of the "F" push button, which is on the control panel, to confirm continuing with the procedure.

Forced switching-on of the laser/Laser functioning test
Dip switch #8 has the dual function of forcing switching-on of the laser and testing its operation.
Access to one function or the other depends on the status of the machine when the dip switch is turned ON.
The purpose of this mechanism is to avoid leaving the laser on all the time, forgetting dip switch #8 ON.

Forced switching-on of the laser

The laser is normally off and is turned on only on the following occasions:
- For 2 seconds when switching the machine on.
- During the Side To Side (STS) function.

If the technician needs to keep the laser on for test purposes (e.g. aligning the beam, checking for parasitic reflections or malfunctions etc.) he can use dip switch #8 to force its switching-on.

To force switching-on of the laser proceed as follows:

1. Make sure the machine is already on.
2. Turn dip switch #8 ON. The laser turns on immediately and stays on.

To remove forced switching-on of the laser, turn dip switch #8 OFF.
If you forget and leave dip switch #8 ON and you then turn the machine off, when turning on the next time the machine goes to the laser functioning test programme, described in the next paragraph.

Laser functioning test

The laser functioning test, not to be confused with the laser Programming procedure described in chapter 9, verifies that the laser's measuring channel is in perfect working order.

The laser functioning test is to be run on the following occasions:
- When the machine is manufactured (in the factory).
- When a new laser is installed.
- When replacing laser wiring.

- Whenever any anomalies occur with the Side To Side (STS) procedure that can be put down to a laser malfunction (error code “E04” displayed or wrong measurement of the side of the wheel).

Working of the whole chain is verified with this test: laser (hardware and programming), laser wiring, electronic CPU-RX2 board.
During the laser functioning test the machine cannot perform any movements, neither in the Manual nor in the Automatic mode.

To access the laser functioning test proceed as follows:
1. Make sure the machine is OFF.
2. Turn dip switch #8 ON.
3. Turn on the machine. “dip8” will be shown blinking on the display to remind you that dip switch #8 is ON.
4. Turn dip switch #8 OFF. The word “laser” will be displayed for 1 second to remind you that you are in the laser functioning test procedure. A numerical number will then be shown on the machine's display ranging from 0 to 1023 which represents the reading of the analogical signal given by the laser.

Note: the value displayed does not represent the target distance in mm but merely the analogical-digital conversion value calculated by the CPU-RX2 board.

5. Move the target over the whole laser measuring range and check that reading varies continuously. This is a qualitative type check. It is also possible to leave the target still in two or three positions to check that the value displayed is stable. But in this case the target must be absolutely stable.

Note: the last digit of the value displayed could fluctuate even if the target is perfectly stable. This fact is normal. If, on the other hand, the fluctuation amplitude is too much the problem could even be due to the target used: highly reflecting surfaces (e.g. chromed or galvanised), particularly dark (e.g. certain types of rubber) or transparent should not be used. Use ordinary card or plastic, not coloured.

Switch the machine off to exit the Laser functioning test.

5. MACHINE CALIBRATION

The machine must be calibrated to be able to use the automatic bead breaker disc tangent and tool tangent functions. It is a two-point calibration and is done by moving the turntable carriage into the all up and all down radial positions.

During calibration the only movements the machine can do are the Turntable UP and DOWN Radial Displacements.

5.1. When calibration is to be done

Calibration is to be done on the following occasions:
- When the machine is manufactured (in the factory).
- When a new electronic control board is installed (and therefore has never been calibrated).
- When an already calibrated electronic control board is installed but on another machine.
- When a different electronic buffer board is installed (the buffer board is near the potentiometer).
- When the potentiometer is replaced (e.g. for repairs).
- When the potentiometer's mechanical system is removed and/or replaced (steel wire retainers, the potentiometer's supporting plate, etc.).
- When there are malfunctions on the machine because the potentiometer is no longer calibrated.

The calibration procedure has priority over all the other calibrations and software corrections available and must always be done first.

The new electronic control boards are supplied without calibration data. The machine will refuse all attempts to use the automatic functions and the error code E00 will be displayed.

5.2. How to calibrate

Calibrate as follows:

1. If there is a wheel on the turntable, remove it. This is recommended but not mandatory. Position the turntable carriage in a point where the radial up/down displacement movement does not interfere mechanically with other parts of the machine, especially the tool holder arm.

UK

2. Turn the machine off, open the electrical board and put dip switch #1 ON.
3. Turn the machine back on: dip1 appears blinking on the display.
4. Put dip switch #1 OFF: Cal1 will now appear on the display blinking.
5. With the joysticks of the control panel, move the turntable carriage into the all-up radial position and then press the P1 push button on the electronic control board. The machine acquires the first calibration point and therefore shows Cal2 on the display, blinking.

Actually point Cal1 can be acquired indifferently with the turntable in the all-up or all-down radial position provided point Cal2 is acquired in the opposite position: the software will automatically put the two points acquired in order before storing.

6. With the joysticks of the control panel, move the turntable carriage into opposite radial position and then press the P1 push button on the electronic control board. The machine acquires the second calibration point and shows the word END on the display, blinking, for 1 second.
7. Calibration is complete and the machine goes to the normal operating mode displaying the default diameter (22.5) not blinking.

It is now possible to proceed with the advance stopping calibration (see chapter 6) if there are the conditions for it, or continue trying the automatic tangent functions.

But if the automatic bead breaker disc tangent or tool tangent function fail to give optimum results, carry out the global bead breaker disc and global tool correction procedures, described in the relative chapters.

The potentiometer is required in order to calibrate. Without the potentiometer, the electronic buffer board or if there are anomalies with the electrical connections, the machine will exit the calibration procedure with the error code E01 shown on the display.

6. ADVANCE STOPPING CALIBRATION

To carry out the automatic tangent functions (bead breaker disc or tool) with maximum precision and repeatability, the machine anticipates stopping of the radial movement of the turntable clamp unit to compensate for the unavoidable inertia of the system.

The actual advance differs according to whether the turntable clamp carries out a radial UP or a radial DOWN displacement because the speeds are different. The two advance values are stored in a non volatile memory and were defined at the machine design stage to ensure the best results in terms of precision and repeatability.

Besides this set advance time, the machine also performs a “dynamic” correction, taking into account the positioning error made in a tangent so as to correct the calculation and execution of the next tangent.

However if, for any reason, the speed of the turntable clamp unit differs a great deal from what was foreseen at the design stage (e.g. for replacing the hydraulic cylinder which performs a radial movement with a slightly different boring one) it is possible to calibrate advance stopping so as to store the two advance values required for that particular machine.

NOTE: This procedure is only available starting from the software release CG R1.0 (incl.). This procedure is not enabled for previous software releases (dip switch #4 is not active).

6.1. When to calibrate advance stopping

Advance stopping calibration is not strictly necessary and must be done in the cases listed below only after having verified that the automatic tangent functions (bead breaker disc or tool) are not equally precise if the tangent is reached with the turntable clamp unit coming from the highest radial positions (furthest away from the user) or the lowest radial positions (nearest to the user):

- When an important mechanical part of the turntable clamp unit is replaced (e.g. the hydraulic cylinder).
- When the hydraulic oil is changed with one whose characteristics differ from those foreseen.
- When the hydraulic pump is replaced with one whose characteristics differ from those foreseen.
- When the automatic tangent functions (bead breaker disc or tool) give results that are quite different depending on the starting position of the turntable clamp unit in relation to the final tangent position.

The operation is optional in the following cases:
- When the machine is manufactured (in the factory).
- When a new electronic control board is installed (never calibrated).
- When an electronic control board is installed that was used before on another machine;

In these latter cases, evaluate the need to calibrate advance stopping based on the results obtained with the tangents.

In all cases, calibrating advance stopping must be done only after having calibrated the machine (Chapter 5).

6.2. Verifying the need to calibrate advance stopping

To verify the need for advance stopping calibration, proceed as follows:

1. Turn the machine on, mount a 22.5" metal sheet rim on the turntable and check that "22.5" is shown on the display.
2. Make sure the temperature of the hydraulic oil is between 35 and 40°C.

Temperatures that are considerably different from these could give incorrect results that will then effect the precision of the automatic tangents.

3. Perform the automatic bead breaker disc tangent procedure several times, starting the turntable clamp unit from opposite radial positions (at least twice from all-up and twice from all-down) and each time measure the distance between the bead breaker disc and the rim.
4. Calculate the difference between the maximum and minimum distance measured at the end of the tangents. If the difference is less than 10 mm it will not be necessary to calibrate advance stopping and work can be started straight away with the machine. If, instead, the difference is greater, then it is better to calibrate advance stopping as described in the next paragraph.

6.3. How to calibrate advance stopping

Proceed as follows to calibrate advance stopping:

1. Turn the machine on and remove the wheel or rim (if any) from the turntable.
2. Position the tool holder arm in the all-up position.
3. Manually carry out a complete up and down radial stroke of the turntable clamp unit to check it comes up against no obstacles (in a following phase the turntable clamp unit will move on its own so there will be no need to guarantee there are no mechanical interferences).
4. Turn the machine off, open the electrical board and put dip switch #4 (on the electronic control board) ON (no other dip switch must be ON).
5. Turn the machine back on: "dip4" appears blinking on the display.
6. Put dip switch #4 OFF: "CAF" will now appear for two seconds on the display.
7. Then the following will appear, each for one second: "AFdn" followed by a numerical value that stands for the extent of the advance stopping of the downward radial movement and also "AFup", again followed by a numerical value that stands for the extent of the advance stopping of the upward radial movement.

UK

8. At this stage the message “GO?” appears on the display blinking which means the machine is asking confirmation to start the procedure. Turn the machine off if you do not want to continue otherwise press and release the “F” key on the control panel;

CAUTION!
Before confirming the procedure make sure there is no one that can be injured or obstacles that can be damaged or that could in any way prevent the machine from automatically moving the turntable clamp unit radially.

9. The machine will automatically start a series of bead breaker disc tangents (for a wheel diameter of 22.5”). To abort the ongoing procedure press any key on the control panel otherwise wait for the procedure to finish;
10. When it has finished “AFdn” and “AFup” will appear on the display always followed by two numerical values that represent the new advance stopping values. These values will be stored in the non volatile memory to be used each time the machine is turned on.

7. GLOBAL BEAD BREAKER DISC TANGENT CORRECTION

Once calibrated the machine is able to perform all the automatic bead breaker disc tangent functions correctly. However, due to tiny mechanical differences between machines, the automatic bead breaker disc tangent functions could bring the bead breaker disc too near or too far away from the rim.

To solve this problem a global bead breaker disc tangent correction procedure is available with which it is possible to fix the tangent point (i.e. the distance between the bead breaker disc and rim) deemed optimum.

NOTE: In the software releases before release CG R0.18 the global bead breaker disc tangent correction procedure also acts on the tool, moving it away or bringing it up to the rim edge by the same extent fixed for the bead breaker disc.

7.1. When to set global bead breaker disc tangent correction

Global correction of the bead breaker disc tangent is not strictly necessary and must be done in the cases listed below only after having verified that the automatic bead breaker disc tangent functions are not giving optimum results:

- When the machine is manufactured (in the factory).
- When a new electronic control board is installed (never calibrated).
- When an electronic control board is installed that was used before on another machine.
- When the potentiometer is replaced (e.g. for repairs).
- When the automatic bead breaker disc tangent functions fail to give satisfactory results (bead breaker disc too near or too far from the rim).

Whatever the case, global correction of the bead breaker disc tangent must only be set after the machine has been calibrated (Chapter 5).

7.2. Verifying the need for global correction of the bead breaker disc tangent

To verify the need to set global correction of the bead breaker disc tangent proceed as follows:

1. Turn the machine on and mount a 22.5” metal sheet rim on the turntable.
2. Carry out an automatic bead breaker disc tangent procedure and check the distance between disc and rim: if the distance is correct there will be no need to carry out the global bead breaker disc tangent correction procedure and you can start working straight away with the machine.

Figure 7-1 gives the nominal bead breaker disc-rim distance values used in the production of the machines. Please refer to these values to evaluate the precision of the tangent just performed and the need for global correction.
3. If, on the other hand, the distance is too small or too great, proceed with setting global correction of the bead breaker disc described in the next paragraph.

Figure 7-1 Nominal bead breaker disc-rim distance values in the bead breaker disc tangents.

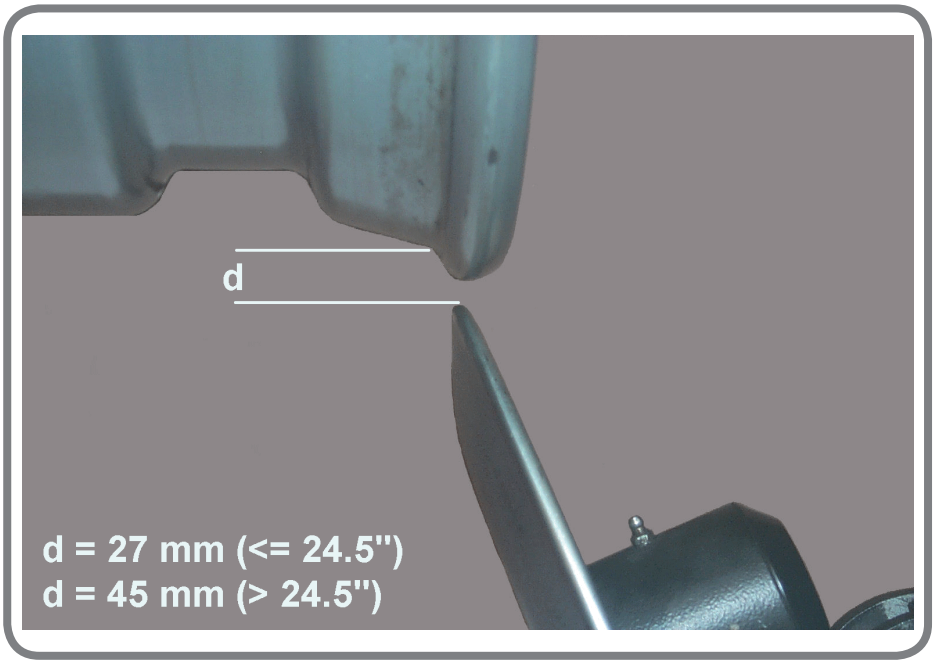

7.3. How to set global bead breaker disc tangent correction

To set the procedure for global correction of the bead breaker disc tangent proceed as follows:

1. Turn the machine on and mount a 22.5" metal sheet rim on the turntable.
2. Carry out an automatic tangent procedure on the bead breaker disc and then move the rim with the manual controls up to the distance with the bead breaker disc deemed optimum.
3. Turn the machine off, open the electrical board and put dip switch #2 (on the electronic control board) ON (no other dip switch must be ON).
4. Turn the machine back on: "dip2" appears blinking on the display.
5. Put dip switch #2 OFF: for two seconds "Corr disc" followed by a blinking numerical value now appears on the display, indicating the global correction value of the bead breaker disc tangent currently stored on the electronic control board. This value will be between -128 and +127;

New electronic control boards are supplied with a global bead breaker disc tangent correction value equal to 0.
The numerical value displayed is an internal machine parameter and does not represent the rim-bead breaker disc distance expressed in millimetres or inches.
Positive values move the bead breaker disc away from the rim, negative values bring it closer.

6. Confirm the rim-bead breaker disc distance chosen at point 1 by pressing push button P1 on the electronic control board. The machine shows the numerical value for one second on the display that corresponds to the global correction of the bead breaker disc tangent that has just been acquired.

UK

Alternatively it is possible to set the numerical value directly of the global bead breaker disc correction with the + and – keys on the control panel (limited to values ranging between -128 and +127) and then confirm by pressing P1.
In this case, however, the physical distance between rim and bead breaker disc will be ignored and the value shown on the display will be stored.

7. The machine now goes to the normal operating mode displaying the default diameter (22.5) not blinking. Carry out the automatic bead breaker disc tangent function a few times to check that setting of the global tangent correction has been successful.
8. If the rim-bead breaker disc distance is what is wanted, the procedure can be deemed completed and normal work can be started. Otherwise global correction of the bead breaker disc tangent will need varying again, so repeat the procedure from point 1.

Once in the setting procedure, if key "C" (Clear) is pressed on the control panel the global correction value of the bead breaker disc is set directly at value 0 and the procedure finishes writing End on the display for one second. However this operation is not mandatory.

8. GLOBAL TOOL TANGENT CORRECTION

Once calibrated the machine is able to perform all the automatic tool tangent functions. However, due to tiny mechanical differences between machines, the automatic tool tangent functions could bring the tool too near or too far away from the rim.

To solve this problem a global tool tangent correction procedure is available with which it is possible to fix the tangent point (i.e. the distance between the tool and rim) deemed optimum.

NOTE: This procedure is only available starting from the software release CG R0.18 (incl.).
In the software releases before release R0.18 the global bead breaker disc tangent correction procedure also acts on the tool, moving it away or bringing it up to the rim edge by the same extent fixed for the bead breaker disc.
Therefore, this procedure is not enabled for previous software releases (dip switch #3 is not active).

8.1. When to set global tool tangent correction

Global correction of the tool tangent is not strictly necessary and must be done in the cases listed below only after having verified that the automatic tool tangent functions are not giving optimum results:

- When the machine is manufactured (in the factory).
- When a new electronic control board is installed (never calibrated).
- When an electronic control board is installed that was used before on another machine;
- When the potentiometer is replaced (e.g. for repairs).
- When the tool is removed and/or replaced;
- When the micro-switch of a horizontal tool is removed and/or replaced (SQ3).
- When the automatic tool tangent functions fail to give satisfactory results (tool too near or too far from the rim).

Whatever the case, global correction of the tool tangent must be set only after the machine has been calibrated (Chapter 5) and made certain that the micro-switch has been adjusted correctly (Chapter 12-2).

8.2. Verifying the need for global correction of the tool tangent

To verify the need to set global correction of the tool tangent proceed as follows:

1. Turn the machine on and mount a 22.5" metal sheet rim on the turntable.
2. Carry out an automatic tool tangent procedure and check the distance between the plastic pad mounted on the tool and the rim: if the distance is correct there will be no need to carry out the global tool tangent correction procedure and you can start working straight away with the machine.

Figure 8-1 gives the nominal tool-rim distance values used in the production of the machines. Please refer to these values to evaluate the precision of the tangent just performed and the need for global correction.

3. If, on the other hand, the distance is too small or too great, proceed with setting global correction of the tool described in the next paragraph.

Figure 8-1 Nominal tool-rim distance values in the tool tangents.

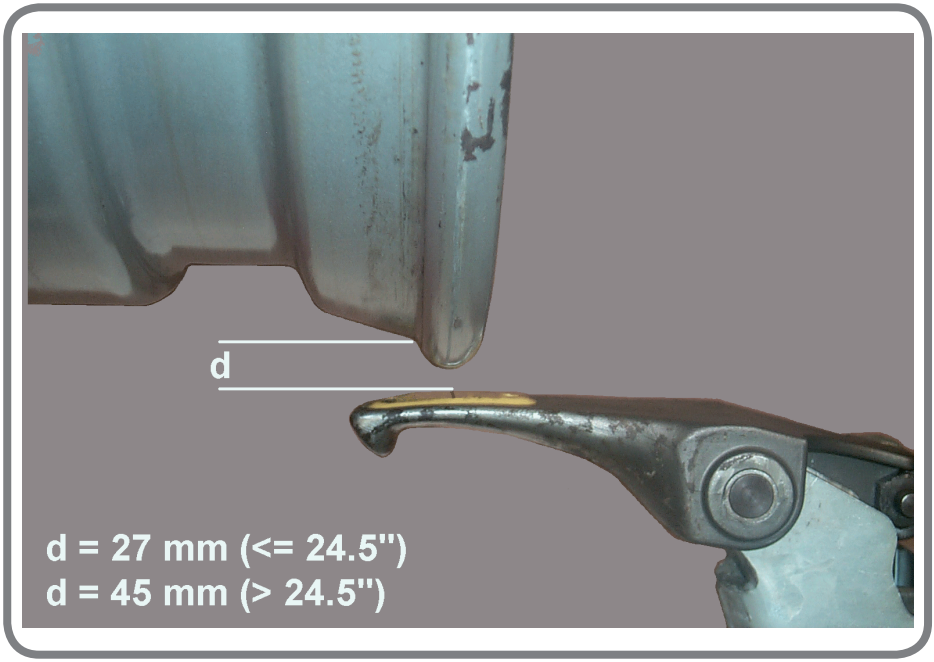

UK

8.3. How to set global tool tangent correction

To set the procedure for global correction of the tool tangent proceed as follows:

1. Turn the machine on and mount a 22.5" metal sheet rim on the turntable.
2. Carry out an automatic tangent procedure on the tool and then move the rim with the manual controls up to the distance with the tool deemed optimum.
3. Turn the machine off, open the electrical board and put dip switch #3 (on the electronic control board) ON (no other dip switch must be ON).
4. Turn the machine back on: "dip3" appears blinking on the display.
5. Put dip switch #3 OFF: for two seconds "Corr tool" followed by a blinking numerical value now appears on the display, indicating the global correction value of the tool tangent currently stored on the electronic control board. This value will be between -128 and +127.

New electronic control boards are supplied with a global tool tangent correction value equal to 0.
The numerical value displayed is an internal machine parameter and does not represent the rim-tool distance expressed in millimetres or inches.
Positive values move the tool away from the rim, negative values bring it closer.

6. Confirm the rim-tool distance chosen at point 1 by pressing push button P1 on the electronic control board. The machine shows the numerical value for one second on the display that corresponds to the global correction of the tool tangent that has just been acquired.

Alternatively it is possible to set the numerical value directly for global correction with the + and – keys on the control panel (limited to values ranging between -128 and +127) and then confirm by pressing P1.
In this case, however, the physical distance between rim and tool will be ignored and the value shown on the display will be stored.

7. The machine now goes to the normal operating mode displaying the default diameter (22.5) not blinking. Carry out the automatic tool tangent function a few times to check that setting of the global tangent correction has been successful.
8. If the rim-tool distance is what is wanted, the procedure can be deemed completed and normal work can be started. Otherwise global correction of the tool tangent will need varying again, so repeat the procedure from point 1.

Once in the setting procedure, if key "C" (Clear) is pressed on the control panel the global correction value of the tool is set directly at value 0 and the procedure finishes writing End on the display for one second. However this operation is not mandatory.

9. PROGRAMMING THE LASER SENSOR

The laser is supplied already programmed by the manufacturer but in the case of necessity it can be (re)programmed at any time, even on the machine.
The purpose of programming is to set the laser operating parameters (e.g. measuring range, selection of the type of output, etc.) on values suitable to be able to work on the machine.

9.1. When to programme the laser

Programming is not necessary because the lasers are already programmed when supplied. However, laser programming can be checked (and repeated if necessary) in the following cases:

- When the machine is manufactured (in the factory)
- When a new laser is installed
- When there are doubts as to whether or not it is working properly.

It is necessary to check that the reference measurements are stored. For this check, see chapters 9.2, 9.3 and proceed with the first 4 steps, if the measurement of 200 is already stored wait 15 seconds to exit the programming mode.

If the measurement of 200 is not stored, proceed with the whole programming sequence.

A laser programmed on a machine can be used on another machine without having to reprogramme it.

9.2. Preparing to programme the laser

To programme the laser it must be connected to the machine's electrical system (with the cable fitted with a 4-pole connector) and powered.
Turn the machine on and then set dip switch #8 ON (all the others must be OFF). The dip switch is on the CPU-RX2 board inside the electrical system.
When programming is finished remember to turn the laser off by putting dip switch #8 OFF.

9.3. Laser programming sequence

The sensor is programmed using the two push buttons Mode/Enter and Set which are in the top part of the laser sensor, just under the display. See figure 9-1.

Figure 9-1 Laser display and programming buttons

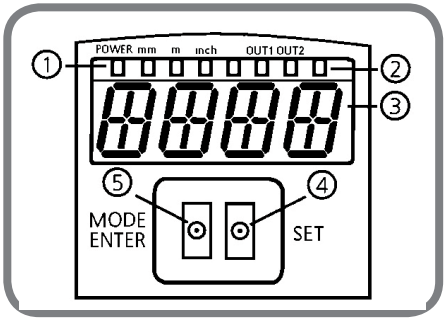

When programming, if the keys are not pressed for more than 15 seconds the laser returns to its initial status, storing any changes made up to that point.

Programme as follows:

Press/Action to be done	The following appears on the display	Remarks
Mode/Enter 4 times	**OU2**	
Set by pressing continuously	List of parameters analogue output type	Keep pressed until U is displayed (output live)
Mode/Enter	**OU2**	
Mode/Enter	**ASP**	Analog Start Point
Set	Numerical values from 0 to 9999	Keep pressed until 200 (mm) is displayed
Mode/Enter	**ASP**	
Mode/Enter	**AEP**	Analog End Point
Set by pressing continuously	Numerical values from 0 to 9999	Keep pressed until 1700 (mm) is displayed
Mode/Enter 2 times	**EF**	Extended Functions
Set	**dS1**	
Mode/Enter 5 times	**diS**	
Set by pressing continuously	**List of display parameters**	Keep pressed until OFF is displayed (display OFF)
Mode/Enter	**diS**	
Wait 15 seconds without pressing any keys	**diS**	The parameters are stored at the end of 15 seconds

UK

Note: To see the distance value even when the display is off, press the Mode/Enter button once: the display turns back on for 15 seconds showing the distance.

At the end of programming it is advisable to run the laser functioning test procedure described in chapter 4.1 to check that programming has been done correctly.

10. ELECTRONIC BOARDS - LAYOUT AND MEASURING POINTS

This chapter shows the layouts of the electronic boards used on the machine. On each board the electrical measurement points are indicated and all the components that may be important during the troubleshooting phase.

10.1. Electronic control board CPU-RX2

The function of the electronic control board CPU-RX2 is to receive the serial commands sent via cable or radio from the control console and to put them into practice, driving the motors and solenoid valves on the machine as required. The board also uses sensors (potentiometer, proximity switch, laser as well as some micro-switches for carrying out the automatic functions that are available, such as, for example, tangent positioning of the bead breaker disc and demounting tool and the automatic bypassing of the wheel (Side To Side).
The CPU-RX2 is shown in figure 10-1.

Figure 10-1 Electronic control board CPU-RX2.

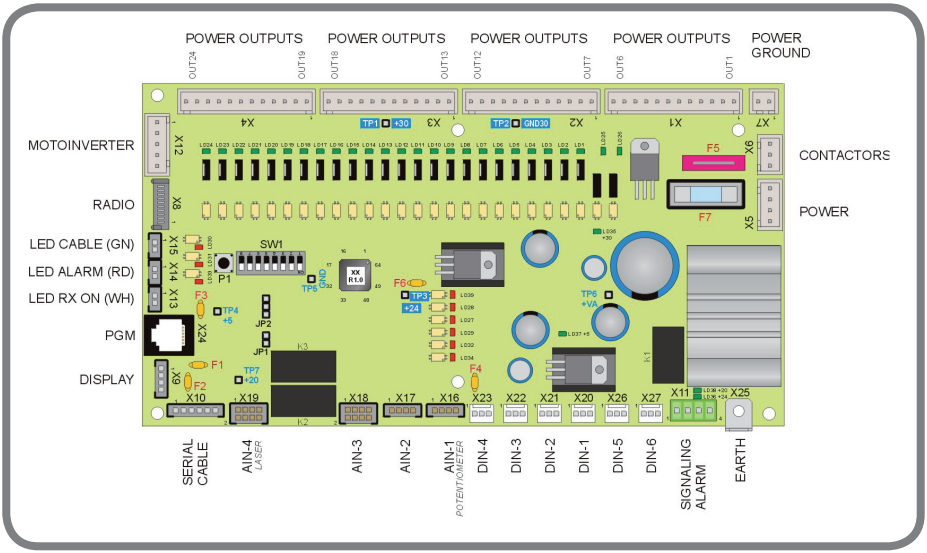

Table 10-1 Description of the LEDS on the CPU-RX2 board

REF.	DEFINITION	Comment and/or reference value
	POWER OUTPUT LEDS	
from LD1 to LD24	Power output LEDS OUT-1 .. OUT-24 (solenoid valves)	Green. Outputs in DC +30V (not stabilised). Each of these LEDs is associated with a solenoid valve: LD1 to YV1, LD2 to YV2 up to LD24 associated with YV24. They must turn on each time the relative valve is powered. Note: LED LD24 turns on each time the second translation speed is activated because this output is reserved for use with the Radio Update Kit.
LD25	Hydraulic control unit motor LED in second speed	Green. Output in AC 25V. This LED must turn on each time the motor of the hydraulic control unit turns in second speed. It can never be ON together with LD26.
LD26	Control unit motor LED in first speed	Green. Output in AC 25V. This LED must turn on each time the motor of the hydraulic control unit turns in first speed. It can never be ON together with LD25.
	DIGITAL INPUT LEDS	
LD27	Digital input LED DIN-1	Red. This LED turns on when the sensor connected to connector X20 supplies an active signal.
LD29	Digital input LED DIN-2	Red. This LED turns on when the sensor connected to connector X21 supplies an active signal.
LD32	Digital input LED DIN-3	Red. This LED turns on when the sensor connected to connector X22 supplies an active signal.
LD34	Digital input LED DIN-4	Red. This LED turns on when the sensor connected to connector X23 supplies an active signal.
LD28	Digital input LED DIN-5	Red. This LED turns on when the sensor connected to connector X26 supplies an active signal.
LD39	Digital input LED DIN-6	Red. This LED turns on when the sensor connected to connector X27 supplies an active signal.
	MOTOR INVERTER CONTROL OUTPUT LEDS	
LD30	Control output S1 of the motor inverter	Red. This LED turns on when the speed/rotation direction control bit S1 of the motor inverter is set.
LD31	Control output S2 of the motor inverter	Red. This LED turns on when the speed/rotation direction control bit S2 of the motor inverter is set.

UK

REF.	DEFINITION	Comment and/or reference value
POWER OUTPUT LEDS		
LD33	Control output S3 of the motor inverter	Red. This LED turns on when the speed/rotation direction control bit S3 of the motor inverter @is set.
POWER SUPPLY LEDS		
LD35	Power supply +30V	Green. Ground **GND30**. This LED indicates that the solenoid valves are being powered (+30V – not stabilised). Protection fuse F5 (on the CPU-RX2 board)
LD36	Power supply +24V	Green. Ground **GND30**. This LED indicates that the solenoid valves are powered (+24V stabilised) Protection fuse F5 (on the CPU-RX2 board)
LD37	Power supply +5V	Green. Ground **GND/AGND**. This LED indicates the presence of the board's internal logic supply voltage (+5V stabilised). Protection fuse F7 (on the CPU-RX2 board)
LD38	Power supply +20V	Green. Ground **GND/AGND**. This LED indicates the presence of the supply voltage of the logic and analog parts external to the board (+20.1V stabilised). Protection fuse F7 (on the CPU-RX2 board)

Note:the four power supply LEDs, LD35, LD36, LD37 and LD38 must be on all the time the machine is on.
If the measurement is taken connecting to another ground the resulting values will have no meaning.

Test point

The test points on the CPU-RX2 board, shown in table 10-2, are for measuring the voltage.

Table 10-2 Description of the test points on the CPU-RX2 board

REF.	VOLTAGE	Comment and/or reference value
TP1	**+30V**	Voltage DC +30V not stabilised. Reference ground **GND30.**
TP2	**GND30**	Ground **GND30.**
TP3	**+24V**	Voltage DC +24V stabilised. Reference ground **GND30.**
TP4	**+5V**	Voltage DC +5V stabilised. Reference ground **GND/AGND**.
TP5	**GND/AGND**	Ground **GND/AGND.**
TP6	**+VA**	Voltage DC +VA not stabilised. Reference ground **GND/AGND.**

Voltages +30V and +24V share the GND30 ground. Voltages +5V and +20V share the GND/AGND grounds. The grounds GND30 and GND/AGND are not in common.

To measure voltage, connect the negative test lead of the multimeter to its reference ground (these are given in table 10-2).
If the measurement is taken connecting to another ground the resulting values will have no meaning.

UK

Connectors

The functions of all the connectors on the CPU-RX2 board are given in table 10-3.
The connectors' reference numbers are first grouped by function and then by progressive number.

Table 10-3 Description of the connectors on the CPU-RX2 board.

REF.	DEFINITION	Comment and/or reference value
	POWER OUTPUT CONNECTORS	
X1	Power outputs OUT-1 .. OUT-6 (solenoid valves)	12-pole connector. Outputs in DC +30V. Common +30V on pins 1,3,5,7,9,11; YV1 on pin 2, YV2 on pin 4 and so on.
X2	Power outputs OUT-7 .. OUT-12 (solenoid valves)	12-pole connector. Outputs in DC +30V. Common +30V on pins 1,3,5,7,9,11; YV7 on pin 2, YV8 on pin 4 and so on.
X3	Power outputs OUT-13 .. OUT-18 (solenoid valves)	12-pole connector. Outputs in DC +30V. Common +30V on pins 1,3,5,7,9,11; YV13 on pin 2, YV18 on pin 4 and so on.
X4	Power outputs OUT-19 .. OUT-24 (solenoid valves)	12-pole connector. Outputs in DC +30V. Common +30V on pins 1,3,5,7,9,11; YV19 on pin 2, YV20 on pin 4 and so on.
X7	Ground **GND30**	2-pole connector. This connector has both pins connected to GND30 ground and only used on the Radio Update Kits.
	DIGITAL CONTROL OUTPUT CONNECTORS	
X6	Contactor drive outputs	3-pole connector. 25 Vac outputs X6:3 K2 drive output (first hydraulic control unit speed) X6:2 K1+K3 drive output (second hydraulic control unit speed). X6:1 common output.
X11	Acoustic-light signal	4-pole connector. Supplies a +30V voltage in output.
X12	@Outputs to control speed and rotation direction of the motor inverter	5-pole connector. Photo-coupled outputs. There are three bits on this connector, S1,S2 and S3 to control the speed and rotation direction of the motor inverter.See table 10-4.
X13	RXON LED (white)	2-pole connector. It provides a +5V voltage in output to drive the led.
X14	ALARM LED (red)	2-pole connector. It provides a +5V voltage in output to drive the LED.
X15	CABLE LED (green)	2-pole connector. It supplies a +5V voltage in output to drive the LED.

REF.	DEFINITION	Comment and/or reference value
ANALOG INPUT CONNECTORS		
X16	Analog input channel AIN-1	4-pole connector. This connector receives in input the signal of the potentiometer used for the radial displacement movement. Supplies a +20V voltage in output.
X17	Analog input channel AIN-2	4-pole connector. Not used at present. Supplies a +20V voltage in output.
X18	Analog input channel AIN-3	4+4-pole connector. Not used at present. Supplies a +20V voltage in output.
X19	Analog input channel AIN-4	4+4-pole connector. This connector receives in input the laser signal used for the Side to Side function (STS). Supplies a +20V voltage in output.
DIGITAL INPUT CONNECTORS		
X20	Digital input channel DIN-1	3-pole connector. This connector receives in input the signal of the proximity switch used for counting the chain links. Supplies a +24V voltage in output.
X21	Digital input channel DIN-2	3-pole connector. This connector receives in input the signal of the tool micro switch in the horizontal position. Supplies a +24V voltage in output.
X22	Digital input channel DIN-3	3-pole connector. Not used at present. Supplies a +24V voltage in output.
X23	Digital input channel DIN-4	3-pole connector. This connector receives in input the signal of the tool micro-switch rotated to the left. Supplies a +24V voltage in output.
X26	Digital input channel DIN-5	3-pole connector. Not used at present. Supplies a +24V voltage in output.
X27	Digital input channel DIN-6	3-pole connector. Not used at present. Supplies a +24V voltage in output.

Table 10 4 Control signals of the speed and rotation direction of the motor inverter.

UK

Table 10 -4 Control signals of the speed and rotation direction of the motor inverter.

Control signals and relative LED indicator light			Turntable clamp rotation direction	Speed	Notes
S1 LD30 LED	**S2** LD31 LED	**S3** LD33 LED			
off	off	off	None	Stopped	
on	off	off	Clockwise	Medium speed	
on	off	on	Clockwise	High speed	
on	on	off	Clockwise	Low speed	Tyre grooving
off	on	off	Anticlockwise	Medium speed	
off	on	on	Anticlockwise	High speed	
Other combinations NOT ALLOWED					

NOTE: The rotation direction of the turntable clamp is reversed with respect to the rotation direction of the motor inverter shaft.
The CPU-RX2 board could be faulty if there are other control signal combinations.

Fuses on the CPU-RX2 board

There are seven protection fuses on the CPU-RX2 board which are described in detail in table 11-1 in the chapter dedicated to fuses.
Two of these fuses are replaceable while the others are the self-restoring type - remove the short circuit and they return to their normal status.

10.2. Potentiometer buffer board (MFPOT4)

The potentiometer buffer board is used to transmit the potentiometer signal to the CPU-RX2 board so that it is not altered by the electrical interference in the environment.
The electrical signal in input to the MFPOT4 board (connector X1 - coming from the potentiometer) is transferred in output (connector X2) with an amplification equal to 1; consequently, electrical measurement of the input signal must always be the same as the signal in output.

The board is near the potentiometer and enclosed in a plastic box guaranteeing water tightness.

Figure 10-2 Potentiometer buffer board MFPOT4

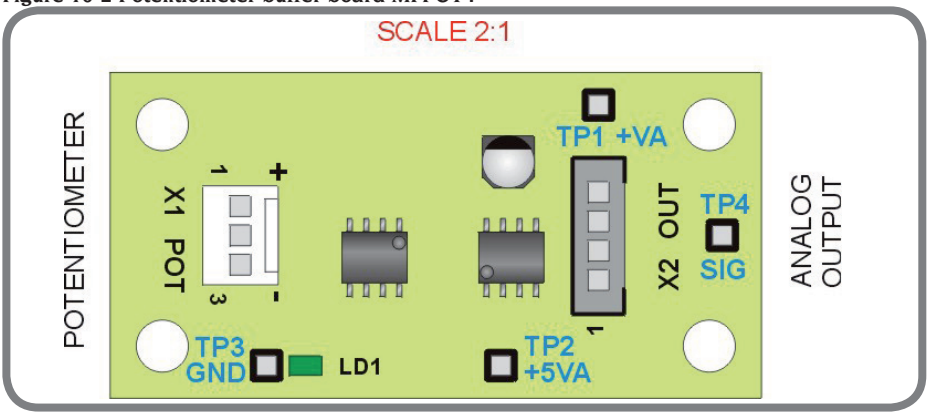

A LED on the board indicates the presence of the supply voltage, +20V, coming from the CPU-RX2 board.

The CPU-RX2 board is able to detect a failure on the MFPOT4 board (no supply, an internal break or faulty wiring). In this case, when the user requires an automatic function that uses the potentiometer signal, the software programme prevents the function from being sent and shows the error code “E01” on the display.

There are no adjustments to be done on the potentiometer buffer board.

10.3. Display board

The display board (DISPLAY SGP58) has four figures, each with 7 segments plus a decimal point.
The following information is shown from time to time on the display:

- The diameter set (in inches or mm).
- Information messages (short messages or abbreviations).
- Error codes (e.g. E00).

The values or messages displayed are usually fixed; if they are blinking it means the machine is waiting for confirmation or for the operator to do something (in some cases press a key, in others release a key or maybe via the dip switches or the P1 push button).

The presence of the display is indispensable for using the automatic functions: if there is no display, any request made for an automatic function is refused and the machine signals this condition with the red ALARM LED blinking on the electrical board.
See visual signalling Table 13-2 for this.

The display communicates serially with the electronic control board (with RS232 electrical levels). Communication is bidirectional: the display responds to each command of the control board with a received signal.

There are no adjustments to be done on the display board.

Figure 10-3 Display board SGP58.

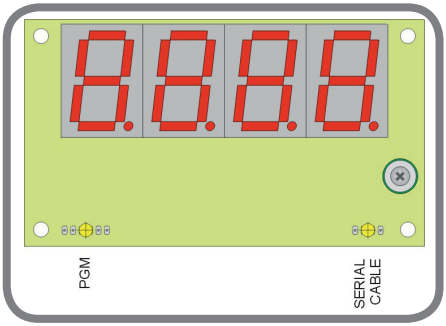

10.4. Radio modem – RX unit

The RX radio modem receives the serial flow of data sent via radio by the homologous TX unit mounted on the trolley that houses the control console.
Once the data have been received via radio it sends them, always serially (with TTL electrical levels) to the CPU-RX2 control board through a flat 10-pole cable.

The RX radio modem can only receive data via radio and not transmit via radio. There are no indicator lights on the RX radio modem unit.

There is a dip switch on the RX radio modem for selecting the radio channel to use (receiving only). 16 different radio channels are available that can be selected by a combination of four dip switches. The same channel must be set on the homologous TX unit on the control console.

UK

Radio channel set-up

The machines are delivered with the RX and TX radio modes set on radio channel 16 (all dip switches OFF).

To set the communication radio channel proceed as follows:

1. Switch the machine off.
2. Disconnect the emergency cable if connected.
3. Open the RX radio modem using a cross slotted screwdriver.
4. Select the radio channel wanted by setting the four dip switches in the combination indicated in Table 10-5.

5. Repeat the same setting on the TX radio modem. Since the TX radio modem is connected to the control console, which is normally battery powered and has no turning on switch, the plastic cover must be removed (under the console) and the battery disconnected from the CPU-TX board. Now set the radio channel on the TX radio modem and reconnect the battery.
6. Turn the machine on and run a functioning test. The RX ON LED (white) on the electrical board must blink when commands via radio are received.
7. If the functioning test is positive, close the two radio modems otherwise check you have selected the same channel on both radio modems and reconnected the battery on the TX unit.

Table 10-5 Selecting the radio channel on the radio modems.

	4-way dip switch			
Radio Channel	**1**	**2**	**3**	**4**
1	ON	ON	ON	ON
2	OFF	ON	ON	ON
3	ON	OFF	ON	ON
4	OFF	OFF	ON	ON
5	ON	ON	OFF	ON
6	OFF	ON	OFF	ON
7	ON	OFF	OFF	ON
8	OFF	OFF	OFF	ON
9	ON	ON	ON	OFF
10	OFF	ON	ON	OFF
11	ON	OFF	ON	OFF
12	OFF	OFF	ON	OFF
13	ON	ON	OFF	OFF
14	OFF	ON	OFF	OFF
15	ON	OFF	OFF	OFF
16 (Default)	OFF	OFF	OFF	OFF

10.5. Radio modem – TX unit

The TX radio modem receives the serial flow of data via cable (10-pole flat cable with TTL electrical levels) from the CPU-TX board located on the control console and transmits them via radio to the homologous RX unit located on the machine's control panel.

The TX radio modem can only transmit data via radio and not receive via radio.

The same considerations for the RX radio modem apply to the TX radio modem including selection of the radio channel which, in this case, is a transmission and not receiving channel.

10.6. Electronic transmission board CPU-TX

The electronic transmission board CPU-TX is inside the control console and its function is to detect the commands sent by the operator via the push buttons, joysticks or pedal unit, to serialise them and then to send them via radio modem or cable to the machine to be actuated.

The CPU-TX board has a double power supply: battery or via an emergency serial cable.

When the battery is nearly flat, the LOW BATT LED (yellow) - visible on the control console - turns on to remind the operator it needs recharging, using the charger supplied with the machine.

When the control console is connected to the machine with an emergency serial cable the battery is not recharged.

The LD5 LED (green) on the CPU-TX board, but not visible on the outside, must turn on each time the emergency serial cable is used to signal that the board is being fed via cable and not by battery.

Figure 10-4 Electronic transmission board CPU-TX.

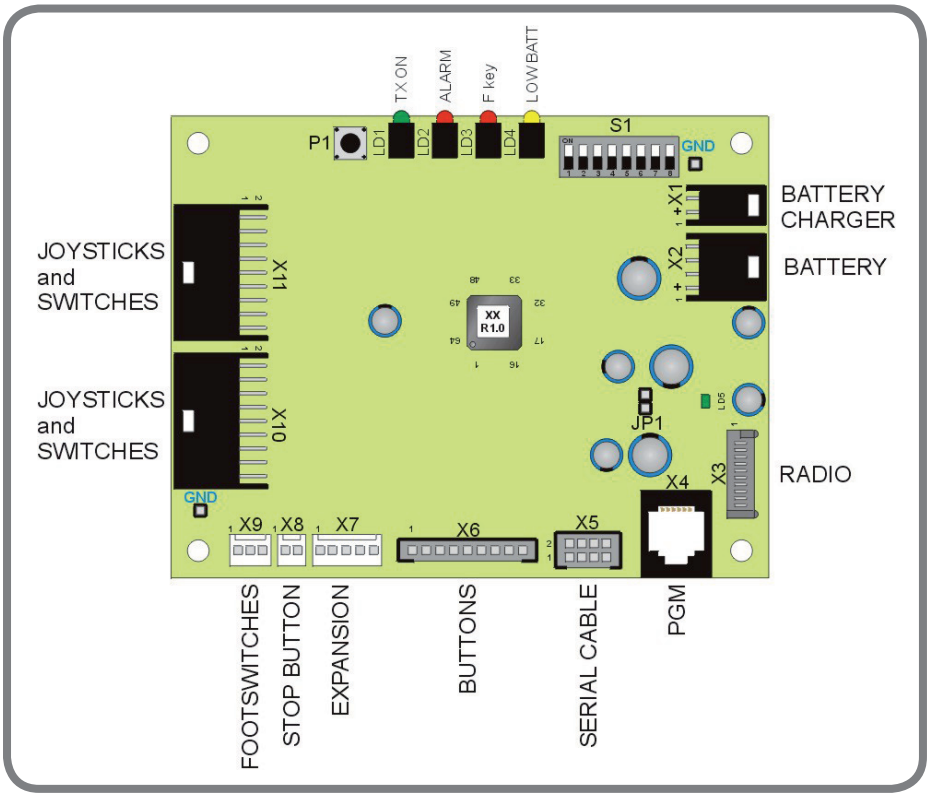

Four LEDS are on the board which are easy to see from the outside, plus another one that cannot be seen from the outside. Their meanings are given in table 10-6.

UK

Table 10-6 Description of the LEDs on the transmission board CPU-TX.

REF.	DEFINITION	Comment and/or reference value
LD1	**TX ON**	Green. This LED must turn on each time a command is activated and must turn off when there are no more commands activated.
LD2	**F**	Red. This LED must turn on each time a the push button F is pressed together with another key to access the second function of the latter. If the key has no second function, pressing the F button has not importance. By pressing just the F key the LED does not turn on but the push button code is still sent to the machine (and consequently the RX ON LED on the machine blinks).
LD3	**STOP**	Red. This LED turns on and stays on the whole time the STOP push button is pressed. Note: the STOP push button is not an emergency stop.
LD4	**LOW BATT**	Yellow. The LED turns on when the battery is low and must be recharged.
LD5	**+5V**	Green. NOT VISIBLE from the outside. The LED must turn on and stay on the whole time the board is powered with the emergency serial cable.

11. ELECTRICAL SYSTEM

The machine's electrical system is enclosed in an electrical board positioned next to the hydraulic control unit. All the cables lead from this electrical board, each one is laid inside a corrugated sheath to guarantee maximum resistance, to the two motors, solenoid valves and to the sensors on the machine.
The electrical system is completed by the part on the trolley which houses the control console.

11.1. Electrical system wiring diagram

The machine's wiring diagram is shown in figures 11-1, 11-2 and 11-3.
A printed copy of the wiring diagram is inside a plastic envelope inside the electrical board.
This copy is always the most updated seeing as it is put in by the system manufacturer when tested so has priority over the diagrams in this manual or in other documents.

Figure 11-1 Wiring diagram, part 1 – Solenoid valve, sensor and board connections.

- **SEE USER MANUAL**

Figure 11-2 Wiring diagram, part 2 – Power supply, motor and transformer connections.

- **SEE USER MANUAL**

Figure 11-3 Wiring diagram part 3 – Internal connections on the control column.

- **SEE USER MANUAL**

11.2. Physical layout of the electrical system

The electrical system is housed inside an electrical board located on the same structure as the hydraulic control unit.
All the cables lead from this electrical board to the various parts of the machine (motors, sensors, etc.). All cables are laid inside corrugated sheaths for greater protection.

Figure 11-4 Physical layout of the electrical board

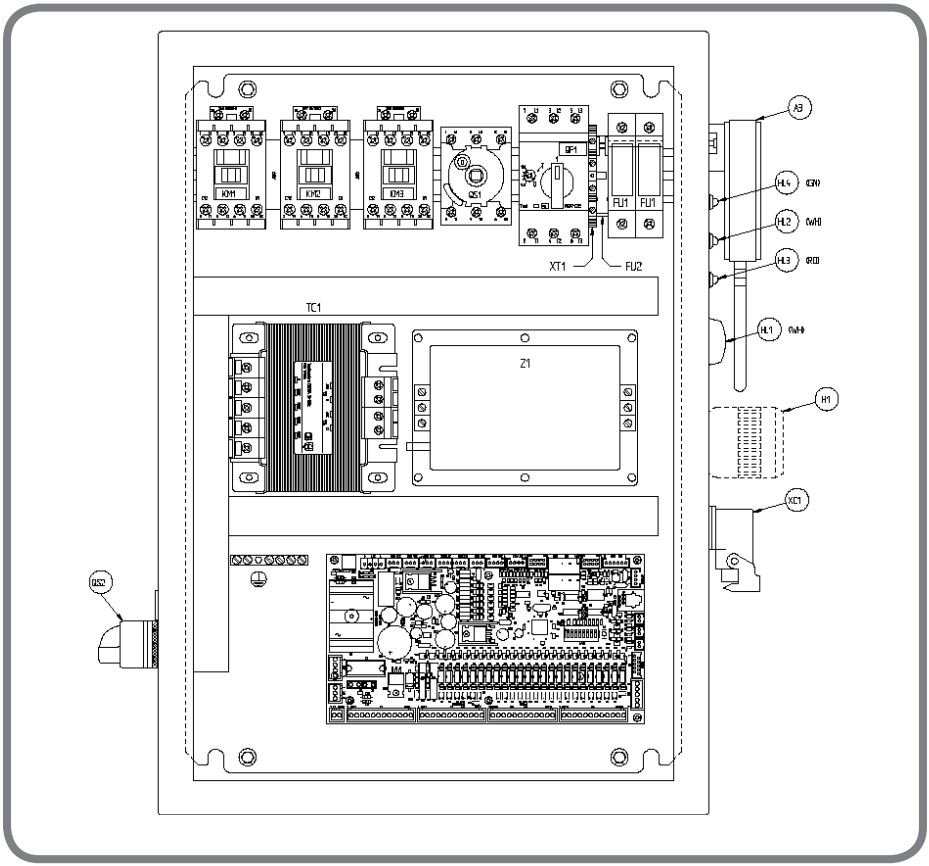

UK

11.3. Fuses

The fuses protecting the electrical system and the electronic control board are mounted in different points. There are 7 fuses on the CPU-RX2 board and 2+1 fuses in the electrical board.

Table 11-1 lists all the fuses, showing their position, electrical properties and functions.

Table 11-1 Position and properties of the fuses on the machine

FUSE POSITION	REF.	VALUE	NOTES
CPU-RX2 board	F1	200 mA	Self-restoring fuse. Reference ground: GND/AGND. This fuse protects the CPU-RX2 board from short circuits on the control console or its connecting cable (internal or external part of the electrical board). No replacement is required; to restore the fuse remove the cause for the short circuit.
CPU-RX2 board	F2	200 mA	Self-restoring fuse. Reference ground: GND/AGND. This fuse protects the CPU-RX2 board from short circuits on the display board or its connecting cable. No replacement is required; to restore the fuse remove the cause for the short circuit.
CPU-RX2 board	F3	200 mA	Self-restoring fuse. Reference ground: GND/AGND. This fuse protects the CPU-RX2 board from short circuits on the radio modem or its connecting cable. No replacement is required; to restore the fuse remove the cause for the short circuit.
CPU-RX2 board	F4	200 mA	Self-restoring fuse. Reference ground: GND/AGND. This fuse protects the CPU-RX2 board from short circuits on the external analog sensors or in their connecting cables. No replacement is required; to restore the fuse remove the cause for the short circuit.

CPU-RX2 board	F5	200 mA	Automobile type blade fuse. Reference ground: GND30. This fuse protects the CPU-RX2 board from short circuits on the solenoid valves or in their connecting cables. If they blow the following LEDs turn off: - LD35
CPU-RX2 board	F6	200 mA	Self-restoring fuse. Reference ground: GND30. This fuse protects the CPU-RX2 board from short circuits on the external digital sensors or in their connecting cables. No replacement is required; to restore the fuse remove the cause for the short circuit. If they blow the following LEDs turn off (or become faint): - LD36
CPU-RX2 board	F7		Glass fuse 5x20 mm delayed. Reference ground: GND/AGND. This fuse protects the CPU-RX2 board from short circuits inside the logic part. If they blow the following LEDs turn off (or become faint): -LD37, LD38
Electrical board	FU1	1A gG (400 V 3ph machines)	Ceramic fuses 10.3x38. This pair of fuses protects both branches of the TC1 transformer primary from short circuiting. If they blow, unplug the X5 connector from the CPU-RX2 board, replace the fuse and turn the machine back on. If it blows again, the problem could be the wiring of the white indicator light HL1 or even the transformer itself. If it does not blow, plug the X5 connector back into the board and turn back on. If it blows now, replace the CPU-RX2 board after making sure there are no short circuits on the solenoid valve connectors.
Electrical board	FU2	T 3.15 A	Glass fuse 5x20 mm delayed. Fuse FU2 protects the transformer from shorts on the lamp that lights the working area (optional) or on its connecting cable.

UK

Line fuses to protect against short circuits

The line fuses are the responsibility of the user who has to have a socket fitted with fuses installed by his own electrician. The size of the fuses must be chosen based on the power the machine absorbs that can be gleaned from the ID plate affixed on each machine.

The line fuses blow in the event of short circuits in the electrical system (control unit motor and relative control circuits, mains filter, motor inverter and relative wiring, wiring inside the electrical board).

Protection against overcurrents

The QF1 circuit breaker protects the hydraulic control unit motor against overcurrents.

The motor inverter is protected against overcurrents by its own control electronics.
For this please see the Motor Protection chapter.

11.4. Motor Protection

A circuit breaker installed on the electrical system protects the hydraulic control motor in the event of overloads and/or overcurrents. The circuit breaker must be rated according to the current absorbed by the motor.

The circuit breaker can be seen in figure 11-4.

Calibrating the circuit breaker must be done on the following occasions:
- When the lift is manufactured (in the factory).
- Each time the circuit breaker is replaced (e.g. when assistance is given).

None of the circuit breakers sent as spares are rated and have to be calibrated as indicated in Table 11-2.

Table 11-2 Circuit breaker calibration values.

Voltage Frequency at which the electrical system works	Calibration value	Notes
400V 50/60Hz	9A	* * *
Other voltage and/ frequency values	NOT SPECIFIED	See Chap. 11.5

Resetting the circuit breaker

The circuit breaker that protects the hydraulic control unit motor is designed for manual resetting: this means that if it trips it will not reset itself automatically - the control knob has to be turned round to position “0” and, after waiting for the motor to cool down, turned back to position “1”.

The circuit breaker trips, cutting supply voltage to the hydraulic control unit motor.

There are no external signals to indicate that the circuit breaker has tripped. The electronic control board continues being powered so if manual or automatic commands are given the solenoid valves continue to trigger and all the indicating devices (display, LEDs, acoustic-luminous signals, indicator lights) will continue working normally.

The turntable clamp will still continue to rotate because the circuit breaker QF1 does not protect the motor inverter.
The motor inverter is protected by its own control electronics.

11.5. Versions of the machine supplied at 200/208/230 V THREE-PHASE

To be able to use the machine with mains voltages of 200/208/230 V three-phase (50/60 Hz) a transformer with a suitable power has to be used that transforms this voltage to 400 V.

A THREE-PHASE 200-208-230-400V - 7.5 KVA AUTO-TRANSFORMER unit is available, designed specifically for this application.

This unit consists of an electrical board inside which the actual auto-transformer is housed. Only the electrical cable for connecting to the room's mains socket leads from this board.
The machine's power lead must be inserted inside the electrical board and connected to the output terminals of the three-pole fuse-holder.

The auto-transformer unit is supplied wired for a mains voltage of 230 V 3ph. To use the mains voltages of 200 V or 208 V, open the electrical system box and move the R, S and T wires onto the relative terminals of the auto-transformer.

Using the three-phase auto-transformer unit, no adjustments of alterations are necessary of the machine's electrical connections.

12. ADJUSTMENTS

The following mechanical adjustments of the machine's sensors are required:

- Adjustment of the proximity switch.
- Adjustment of the horizontal tool micro-switch (SQ3).
- Adjustment of the right tool rotation micro-switch (SQ4).

The adjustments are described in the following paragraphs. The potentiometer, on the other hand, does not require mechanical adjustments but only a software calibration (Chapter 5).

12.1. Adjusting the proximity switch

The proximity switch is used during the Side To Side function to count the links of the chain and, therefore to know indirectly the relative position of the laser in relation to the edge of the wheel.

The working distance is to be adjusted as follows:

1. Translate to the left or right until the most prominent part of the chain (the convex part) is facing the proximity switch.
2. If the proximity switch is faulty remove it and install the new one.
3. Move the proximity switch near until there is a space of 2 mm between the flat surface of the sensor and the chain, as can be seen in figure 12-1, and then tighten the two locking nuts by hand to keep it in position. The LED on the body of the proximity switch must turn on.
4. Tighten the two nuts with a spanner, taking care that the distance is always 2 mm. The tightening torque must not be too much otherwise it will damage the component.
5. Translate several times to the right and left checking that the LED on the component turns on and off at a rate of about 50% between turning on and turning off. Also check that LED LD27 on the CPU-RX2 board turns on and off at the same rate. LED LD27 allows you to check that all the proximity switch's wiring up to the electronic board is working;
6. Repeat the translations in second speed, checking both LEDs.

Figure 12-1 Adjusting the working distance of the proximity switch.

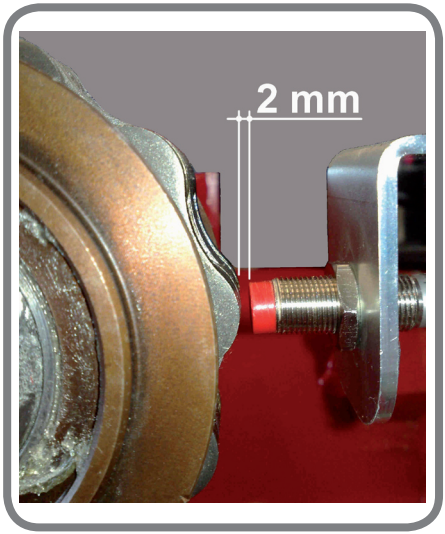

UK

Grease, oil and dust do not influence proximity switch reading.

12.2. Adjusting the horizontal tool micro-switch

To adjust the horizontal tool micro-switch (SQ3) consult the mechanical part of the service manual.

12.3. Adjusting the left-rotated tool micro-switch

To adjust the left-rotated tool micro-switch (SQ4) consult the mechanical part of the service manual.

12.4. Replacing the potentiometer

The potentiometer that measures radial displacement requires no mechanical adjustments. If the potentiometer has to be removed and/or replaced, simply fix it to the machine and hook its steel cable on the steel hooking-up sheet. See the relative chapter in the mechanical section.

The steel cable must be parallel with the bar to achieve maximum linearity in reading. Therefore, adjust the hooking-up sheet as illustrated in figure 12-2.

Figure 12-2 Adjusting parallelism of the potentiometer's steel cable.

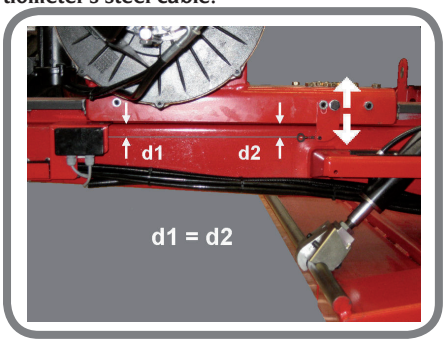

Subsequent to replacing/reassembly, calibration has to be done (Chapter 5) followed, if necessary, by the global correction procedures of the bead breaker disc tangent (Chapter 7) and/or global correction of the tool tangent (Chapter 8).

12.5. Connecting and adjusting the acoustic/luminous indicator

The acoustic/luminous indicator (identified by H1 on the wiring diagram) can work in different modes depending on the type of connection. The indicator on this machine must work intermittently both acoustically and luminously.

To have the right operating mode, connect the wires as indicated in figure 12-3.

Figure 12-3 Connecting the acoustic/luminous indicator.

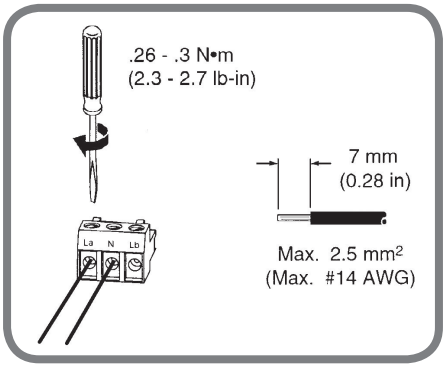

Acoustic power can be adjusted via the trimmer using a small, slotted screwdriver; the trimmer is inside the body of the indicator, as shown in figure 12-4.

The indicators installed on the machines are adjusted to the minimum acoustic power.

Figure 12-4 Adjusting the acoustic power of the indicator.

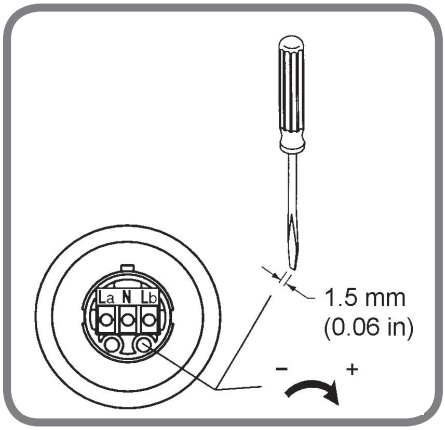

13. TROUBLESHOOTING

For troubleshooting purposes, the first thing that ought to be done is to check the messages and acoustic and luminous indications given by the machine.

Based on the operating mode, the indications given on the display (written messages and acoustic signals) by three external LEDs and the acoustic/luminous indicator can help understand the reason for the malfunctions or faults.

13.1. Operating modes and indications

The machine has different ways of working and different personnel access levels.
Moreover, during operation three LEDs on the side of the electrical board are used as well as the display (that also has a buzzer) to indicate the active mode and machine status.

There is also an acoustic-luminous indicator (blinking) that is activated when potentially dangerous commands are being executed.

UK

Operating modes

Table 13-1 summarises the machine's operating modes.

Table 13-1 Operating modes

Mode	ALARM LED (red)	RX ON LED (white)	CABLE LED (green)	DISPLAY	Access level	Notes
NORMAL MODE	off	It blinks when commands are received	On with a steady light if the cable is connected; otherwise it is off	Variable messages	END USER	Standard working mode.
MANUAL MODE	Blinks quickly when automatisms are required, otherwise it is off.	It blinks when commands are received	On with a steady light if the cable is connected; otherwise it is off	Variable messages	END USER	If there is no display or it malfunctions the automatisms cannot be used - only the manual controls can.
	Blinks quickly (until the machine turns off) as soon as an automatism is asked for	It blinks when commands are received	On with a steady light if the cable is connected; otherwise it is off	Variable messages	END USER	If there are no calibration data the automatisms cannot be used, only the manual controls can.
	It blinks very slowly (the on/off cycle lasts 2 s)	Off	On with a steady light if the cable is connected; otherwise it is off	Variable messages or OFF	END USER	This indication can only occur when switching on and means the display is disconnected/ faulty and a dip switch is ON at the same time. Simply turn the dip switch off in order to continue working, even if only in the manual mode.
STOP MODE	on	Off for at least 20 seconds then blinks if commands continue arriving	It stays in the status it was in before entering the Stop Mode	It displays “STOP” for at least 20 seconds	END USER	The stop button has been pressed (NOT the emergency button). Lasts at least 20 seconds but continues until all controls are released.

SERVICE MODE	Slow blinking	It blinks when commands are received	On with a steady light if the cable is connected; otherwise it is off	Variable messages	Technical assistance personnel	This operating mode includes the Calibration and Setting programmes for global corrections.
FACTORY MODE	Variable status based on the commands given	It blinks when commands are received	On with a steady light if the cable is connected; otherwise it is off	Variable messages	Factory staff	

Errors and signals on the display

When working in the NORMAL MODE some occurs can occur that are described in Table 13-2. The error code is displayed. Some errors prevent use of the machine's automatisms (e.g. errors E00 and E01) or cause advance ending (e.g. error E11).
By pressing the Clear key on the control panel the error code disappears from the display but the cause for the alarm is not removed so if the command that caused it is repeated the message will appear again

Table 13-2 Error codes and their meanings

# ERROR	MEANING	ACTION
E00	Calibration data missing	Calibrate the machine. If the error persists replace the CPU-RX2 board. This indication is always given also when installing a new board.
E01	No signal on the analog channel #1 (radial displacement measuring potentiometer).	Check the connection of the potentiometer and that it is sound. If the error persists call for technical assistance.
E02	No signal on the analog channel #2 (this channel is not used at present)	
E03	No signal on the analog channel #3 (this channel is not used at present)	
E04	No signal on the analog channel #4 (analog laser for Side To Side)	Check the connection of the laser and that it is sound. Also check that the front glass of the laser is not dirty. If the error persists call for technical assistance.
from E05 to E10	Not used	
E11	No signal on the digital channel #1 (proximity chain link count)	Check the connection of the proximity, its soundness and adjustment (Chap. 12-1).

UK

The figures or message displayed are normally fixed but in some cases can blink.
As a general rule, applicable for all operating modes, the following is true:
when the figures and/or messages are blinking it means that the value displayed must be confirmed by the operator or is waiting for the operator to do something.

Acoustic indications via the display

In all operating modes the display emits the beeps indicated in Table 13-3:

Table 13-3 Beeps emitted by the display

Beep	Meaning	Action
1 short beep	Confirming pressure of the following push buttons: - setting/deleting memory; - selecting inches/mm;	None.
2 short beeps	Not used	None.
1 short beep + 1 long beep	Confirm. The action that was taken was successful.	None.
3 short beeps	Negation. The action that was taken was unsuccessful or the action required is not allowed.	Repeat the action after having changed the parameter of the machine you are working on or carry out an action that is allowed.
Continuous slow intermittence	Special operating mode active.	Used in the SERVICE MODE (e.g. in calibration) to call one's attention to the fact that a special potentially hazardous operating mode is active.

Luminous-acoustic indicator

The luminous-acoustic indicator, which is located on top of a rod next to the electrical board, is activated by the machine each time potentially dangerous manual or automatic commands are executed. The indicator has a blinking orange light. Besides blinking, the indicator emits a high intensity intermittent sound.

The following commands activate the acoustic-luminous indicator:
- Turntable opening/closing;
- Turntable lifting/lowering;
- Tool arm + bead breaker disc lifting/lowering;
- Bead breaker disc tangent;
- Tool tangent;
- Side to Side.

13.2. Check correct turning on/off of the solenoid valves

The machine has a set of 17 solenoid valves for actuating all the commands except those for rotating the turntable clamp.

The solenoid valves are driven directly by the control board CPU-RX2.

The function of the YV1 solenoid valve is to drain the oil (BYPASS) and is the normally open type so that the flow of oil is always drained into the tank all the time the valve is NOT powered; as soon as it is powered it switches to the closed status, rendering the oil available to the actuators.

The YV1 solenoid valve is powered as soon as a command is given to the machine and unpowered only when there are no other solenoid valves powered.

All the other solenoid valves are the normally closed type and open hydraulically only when they are powered.

There is a correspondence between the commands given on the control console and the solenoid valves.
This correspondence is direct in the case of manual commands: one command powers just one solenoid valve (most obviously YV1).
In the case of automatic commands however, several solenoid valves can be powered simultaneously and,with some of these commands the solenoid valves can be powered in sequence determined by software based on the initial conditions of the machine.
This makes it harder to establish the correctness of powering the solenoid valves.

However, it is still possible to check which solenoid valves are powered by observing the LD1:LD24 LEDs on the CPU-RX2 board.
Each of these LEDs turn on when the relative solenoid valve is powered according to the following correspondence: LD1 ➡ YV1, LD2 ➡ YV2, LD3 ➡ YV3 and so on.

Figure 13-1 graphically illustrates all the solenoid valves that must be powered by the various machine commands.

Generally speaking, however, the following is true:

To analyse correct powering of the solenoid valves, give any one manual command and see which solenoid valve is powered and what the machine does.

If, for the command given, the solenoid valve powered is the one shown in figure 13-1 but the movement of the machine is opposite that indicated by the screen printing then there could be a reversal of the connections on the solenoids of the valves or the hydraulic pipes have been reversed.

If, for the same command, the solenoid valve powered is different from the one shown in figure 13-1 then it could be that the connections inside the control console have been reversed or the joysticks and lever switches mounted incorrectly.

This check is to be repeated for each manual command to ensure correct connection of the solenoid valves and hydraulic pipes.

UK

Figure 13-1 Correspondence of the solenoid valves with the commands.

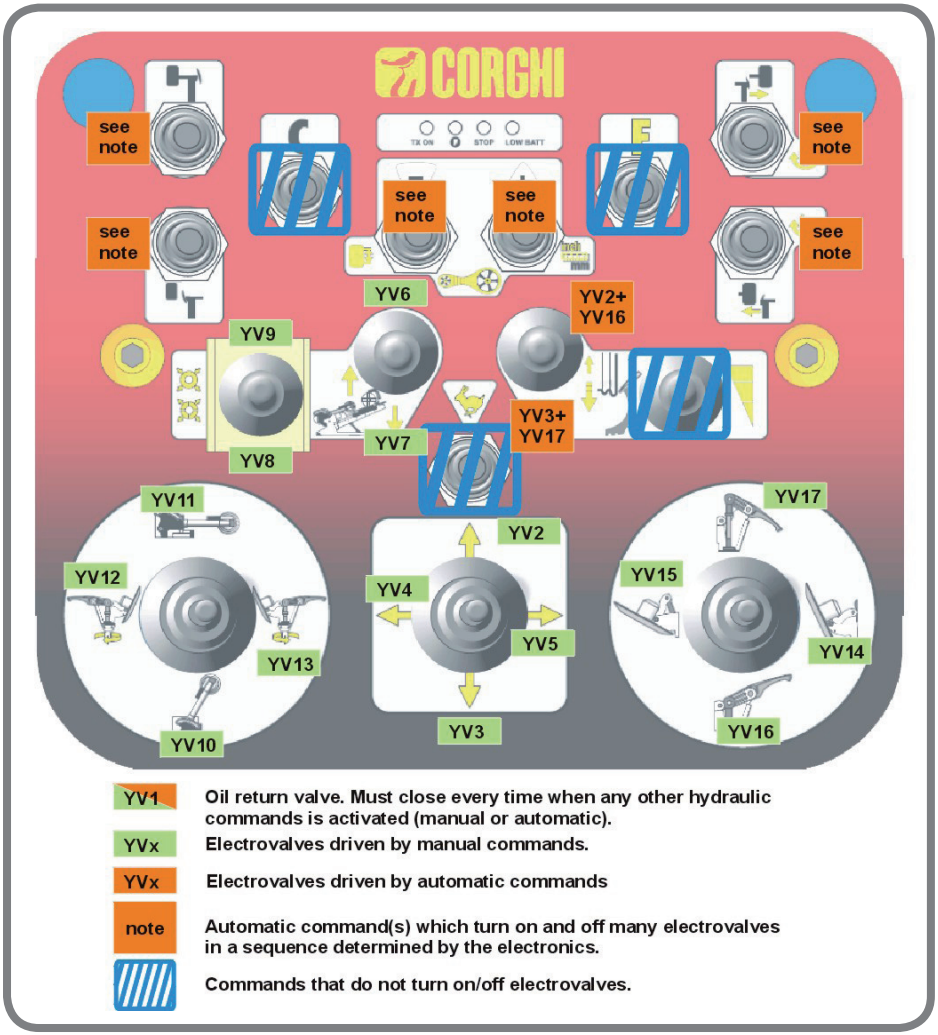

13.3. Frequent Questions

This chapter lists possible malfunctions in the shape of questions. An answer is given for each one with the possible cause and remedy.

#001

D. The machine only works at first speed and never turns off at the end of the commands.

R. Maybe the emergency switch QS2 has been activated - it is on the left of the electrical board. Check if this switch is in position 1. It should normally be in position 0.

In addition, if you are carrying out a Side To Side procedure with the switch QS2 on 1 the operation will be aborted as soon as translation starts and error code "E11" will be displayed.

#002
D. When the turntable clamp is turning in the anticlockwise direction it is impossible to have the lowest speed (grooving speed) whereas it is possible in clockwise rotation.

R. This is perfectly normal: grooving speed is only available with clockwise rotation.

#003
D. The machine is not moving anymore, even turning it off and then on again but rotation of the turntable clamp is still possible.

R. Maybe the QF1 circuit breaker has tripped, cutting power to the hydraulic unit motor. If this happens reset the circuit breaker (chapter 11.4.1). Alternatively fuse F5 could have blown (10 A, blade type) which is on the CPU-RX2 board. In this case replace the fuse after having checked the cause for it blowing.

#004
D. When some commands are given the machine does not execute them and a loud buzzing can be heard coming from the electrical system. Turntable clamp rotation is always available however.
R. The solenoids relative to the commands that are not executed could have shorted. Unplug the electrical connector of these solenoids and measure their electrical resistance. If they have shorted they must be replaced.

#005
D. The machine is only carrying out manual commands and not the automatic ones although there are no error codes on the display. The alarm LED on the side of the electrical system box blinks when automatic commands are required.

R. Probably the control board CPU-RX2 failed to recognise the presence of the display, even if it is present and working, so has consequently disabled the automatic commands.
Try turning the machine off and on: if nothing happens, check the connecting cable between the control board and the display. If the cable is connected as it should be, try replacing the cable, then the display board and lastly the control board CPU-RX2.

#006
D. When the machine is switched on it often causes the differential circuit breaker on the power supply board to trips.

R. The machine's connection to the electricity mains must include installation upstream of a thermal-magnetic circuit breaker and a differential circuit breaker with tripping characteristics as recommended in the ELECTRICAL CONNECTIONS chapter in the Operating and Maintenance manual.

#007
D. “8.8.8.8.” is always on the display. Sometimes the machine works, sometimes it doesn't.

R. This could be due to two completely different reasons:
a) the CPU-RX2 board is malfunctioning so is not sending any data to the display which, with no data, enters its self-test mode, turning on all the segments and dots. In this case however the machine is blocked because the electronic control board is malfunctioning.
In this case the only solution is to replace the CPU-RX2 board.

b) the CPU-RX2 boards sends data to the display which fail to arrive at destination so the display enters its self-test mode anyway. In this case the machine executes all the manual commands but not the automatic ones because, not receiving the data, the display does not respond to confirm reception and therefore, as far as the electronic control board is concerned, the display is not present.
The most likely cause for this failure is a defect with the cable connecting the display to the electronic control board.

Note: the same indication can be caused by partial failures with the display board or CPU-RX2 board (possible but unlikely).

UK

14. GLOSSARY

Circuit breaker = device that protects against overcurrent. It is used on this machine to protect the motor of the hydraulic control unit.

Leva la Leva (Without Lever) = automatic procedure to extract the bead. In this procedure we have a simultaneous movement of the turntable clamp unit and the tool.

Leva la Leva (Without Lever) Backwards = procedure opposite that of Leva la Leva (Without Lever) that brings the turntable clamp unit and tool back into their initial positions. Also in this procedure we have a simultaneous movement of the turntable clamp unit and the tool but reversed.

Proximity switch = inductive type, used to count the chain links and therefore know the relative displacement between the tool holder arm and the turntable clamp carriage during the STS procedure.

Side To Side = automatic procedure where, by means of the laser signal, the machine bypasses the wheel. This procedure is abbreviated with the acronym STS.

STS = see Side To Side.

15. SUMMARY OF MACHINE CALIBRATIONS AND SETTINGS

The following figure summarises the service programmes for calibrations to be done on the machine starting with the most important. Not all operations are compulsory except for calibration.
Only the most common cases of application are given in the boxes in the Application column: consult the relative chapter to see what all the application cases are.

OPERATION	APPLICATION
MONITOR (Chap.5) **Dip switch #1**	**COMPULSORY when:** - replacing the CPU-RX2 board with a new one or coming from another machine; - replacing and/or removing and remounting the potentiometer.
ADVANCE STOPPING CALIBRATION (Chap.6) **Dip switch #4**	**OPTIONAL when:** - replacing the CPU-RX2 board with a new one or coming from another machine; - Tangent results are not exact and/or repeatable and vary depending on the turntable clamp's direction; **RECOMMENDED when:** - The hydraulic cylinder that provides radial movement to the turntable clamp is replaced; - The turntable clamp unit is removed and remounted.
GLOBAL BEAD BREAKER DISC TANGENT CORRECTION (Chap.7) **Dip switch #2**	**COMPULSORY when:** - replacing the CPU-RX2 board with a new one or coming from another machine; **OPTIONAL when:** - the potentiometer is replaced;
GLOBAL TANGENT CORRECTION OF THE TOOL (Chap.8) **Dip switch #3**	**COMPULSORY when:** - replacing the CPU-RX2 board with a new one or coming from another machine; **OPTIONAL when:** - the potentiometer is replaced; - when the tool is removed and/or replaced; - the tool's micro-switch is removed and/or adjusted.

Key:
COMPULSORY: the operation is indispensable if the cases listed in the box on the right occur.
OPTIONAL: the operation is not indispensable but should only be done if the results are unsatisfactory.
RECOMMENDED: the operation is not indispensable but is recommended anyway to be certain of getting the best results.

UK

Notes

Notes

UK

Notes

Notes

UK

COMIM - Code 4-329712_uk - 02/10

CORGHI S.p.A. - Via per Carpi n.9
42015 CORREGGIO - RE - ITALY
Tel. +39 0522 639.111 - Fax +39 0522 639.150
www.corghi.com - info@corghi.com